Everest XCR - Product manual

Edition 02/24/2021

For the most up to date information visit the online manual.

微信公众号 抖音视频号

携手慧摩森 创建灵巧之运动

INGENIA-CAT S.L.

AVILA 124 2-B

08018 BARCELONA

代理商：北京慧摩森电子系统技术有限公司
地址：北京市朝阳区朝阳北路甲27号B1座302室
电话：010-62311872
传真：010-62316782
邮箱：sales@bjsm.com.cn

INGENIA
passion for motion

1. Table of Contents

1. Table of Contents 2

2. General Information 5

2.1. Manual revision history 5

2.2. Disclaimers and limitations of liability 5

2.3. Contact 5

3. Safety Information 6

3.1. For your safety 6

3.2. Warnings 6

3.3. Precautions 6

3.4. Pour votre sécurité 6

3.4.1. Avertissements 7

3.4.2. Précautions 7

4. Product Description 8

4.1. Part Numbering 9

4.2. Specifications 14

4.3. Product Revisions 21

4.4. Thermal and Power Specifications 21

4.4.1. Standby power consumption 21

4.4.2. Thermal model 22

4.4.3. Current derating 23

4.4.4. Heat dissipation and heatsink calculation 23

4.4.5. Energy efficiency 25

5. EtherCAT specifications 26

6. CANopen Specifications 28

7. Connectors Guide 29

7.1. Connector Overview 29

7.2. Supply 29

7.3. Motor 30

7.4. Feedback Connector 30

7.5. Input / Outputs Connector 32

7.6. EtherCAT Connectors 34

7.7. Mating Connectors 35

7.7.1. Common mating terminals and cables for all signal connectors 37

8. Signalling LEDs 40

8.1. LED Signal Definitions 40

8.2. EtherCAT protocol (EVE-XCR-E) 42

8.2.1. Start-up Sequence 43

8.3. CANopen protocol (EVE-XCR-C) 45

8.3.1. Start-up Sequence 46
9. Wiring and Connections 47
9.1. Everest XCR Connection Diagram 47
9.2. Protective Earth 49
9.3. Power Supply and Motor Power 51
9.3.1. Single Power Supply 51
9.3.1.1 Power Supply Requirements 51
9.3.2. Dual Power Supply 52
9.3.2.1 Logic Supply Requirements 52
9.3.3. Power Supply EMI Filter 52
9.3.4. Shunt Braking Resistor Connection 53
9.3.5. Motor Connections 54
9.3.5.1 3 Phase Brushless 54
9.3.5.2 DC Motor 55
9.3.5.3 Motor Choke 55
9.3.6. Power Wiring Recommendations 56
9.3.6.1 Cable Selection 56
9.3.6.2 Soldering Power Pins 58
9.4. Safe Torque Off (STO) 60
9.4.1. Safety Function Specifications 60
9.4.2. Integration Requirements 61
9.4.3. STO External Diagnostic Test 63
9.4.4. STO Operation States 65
9.4.5. Interface and Connections 66
9.4.6. STO bypass (needed when no STO functionality is implemented) 68
9.5. Brake and Motor Temperature 70
9.5.1. Motor electromagnetic / electromechanical brake 70
9.5.2. External temperature sensor 71
9.6. Feedbacks 73
9.6.1. Digital Halls 73
9.6.2. Absolute Encoder 1 75
9.6.3. Absolute Encoder 2 77
9.6.4. Incremental Encoder 78
9.6.5. Feedback wiring recommendations 80
9.7. Inputs and Outputs 82
9.7.1. Digital Inputs Interface 82
9.7.2. Analog Input Interface 84
9.7.3. Digital Outputs Interface 85
9.8. Communications 87
9.8.1. EVE-XCR-C (CANopen & Ethernet Interface) 87

9.8.1.1 CAN wiring recommendations 88
9.8.2. EVE-XCR-E (EtherCAT Interface) 89
9.8.2.1 Recommended EtherCAT cables and connectors 90
9.8.2.2 Ethernet over EtherCAT (EoE) Protocol - Used by Motion Lab 3 92
10. Dimensions 94
11. Installation 95
11.1. Unboxing 95
11.2. Installation Safety Requirements 95
11.3. Mounting the Drive to a Heatsink or Cooling Plate 95
11.3.1. Back Installation 96
11.3.2. Front Installation 97
12. Commissioning 99
12.1. Safety first 99
12.2. Decommissioning 100
13. EMC and Environmental Testing Details 101
14. Service 103

2. General Information

2.1. Manual revision history

Revision	Release Date	Changes	PDF
v1	01 Apr 2019	Initial version	
v2	21 Feb 2020	Added safety-related indications, expanded STO information, added commissioning guide. Reordered manual structure.	
v3	14 Sep 2020	Changes according to Safe Torque Off (STO) certification.	
v4	14 Dec 2020	Changed PN from generic to CANopen / EtherCAT specifics.	

For the most up to date information use the online Product manual.

2.2. Disclaimers and limitations of liability

The information contained within this document contains proprietary information belonging to **INGENIA-CAT S.L.**

Such information is supplied solely for the purpose of assisting users of the product in its installation.

INGENIA-CAT S.L. rejects all liability for errors or omissions in the information or the product or in other documents mentioned in this document.

The text and graphics included in this document are for the purpose of illustration and reference only. The specifications on which they are based are subject to change without notice.

This document may contain technical or other types of inaccuracies. The information contained within this document is subject to change without notice and should not be construed as a commitment by **INGENIA-CAT S.L.**

INGENIA-CAT S.L. assumes no responsibility for any errors that may appear in this document.

Some countries do not allow the limitation or exclusion of liability for accidental or consequential damages, meaning that the limits or exclusions stated above may not be valid in some cases.

2.3. Contact

INGENIA-CAT S.L.
C/ Avila 124, 2-B
08018 Barcelona
Spain

Telephone: +34 932 917 682
E-mail: hello@ingeniamc.com
Web site: www.ingeniamc.com

3. Safety Information

3.1. For your safety

The instructions set out below must be **read carefully prior to the initial commissioning or installation** in order to raise awareness of potential risks and hazards, and to prevent injury to personnel and/or damage to property.

To ensure safety when operating this servo drive, it is mandatory to follow the procedures included in this manual. The information provided is intended to protect users and their working area when using the device, as well as other hardware that may be connected to it.

3.2. Warnings

Electric servo drives are dangerous: The following statements should be considered to avoid serious injury to individuals and/or damage to the equipment:

- Do not touch the power terminals of the device (supply and phases) as they can carry dangerously high voltages > 50 V.
- Never connect or disconnect the device while the power supply is ON to prevent danger to personnel, the formation of electric arcs, or unwanted electrical contacts.
- Disconnect the drive from all power sources before proceeding with any wiring change.
- The surface of the device may exceed 100 °C during operation and may cause severe burns to direct touch.
- After turning OFF and disconnecting all power sources from the equipment, wait at least 10 seconds before touching any parts of the controller, as it can remain electrically charged or hot.

3.3. Precautions

The following statements should be considered to avoid serious injury to those individuals performing the procedures and/or damage to the equipment:

- Always comply with the connection conditions and technical specifications. Especially regarding wire cross-section and grounding.
- Some components become electrically charged during and after operation.
- The power supply connected to this controller should comply with the parameters specified in this manual.
- When connecting this drive to an approved power source, do so through a line that is separate from any possible dangerous voltages, using the necessary insulation in accordance with safety standards.
- High-performance motion control equipment can move rapidly with very high forces. An unexpected motion may occur especially during product commissioning. Keep clear of any operational machinery and never touch them while they are working.
- Do not make any connections to any internal circuitry. Only connections to designated connectors are allowed.
- All service and maintenance must be performed by qualified personnel.
- Before turning on the drive, check that all safety precautions have been followed, as well as the installation procedures.

3.4. *Pour votre sécurité*

*Les instructions ci-dessous **doivent être lues attentivement avant la mise en service ou l'installation initiale** afin de sensibiliser aux risques et dangers potentiels et de prévenir les blessures aux personnes et/ou les dommages aux biens.*

Pour garantir la sécurité lors de l'utilisation de ce servomoteur, il est obligatoire de suivre les procédures incluses dans ce manuel. Les informations fournies sont destinées à protéger les utilisateurs et leur zone de travail lors de l'utilisation de l'appareil, ainsi que les autres matériels qui peuvent y être connectés.

3.4.1. *Avertissements*

Les servo-entraînements électriques sont dangereux *: Les déclarations suivantes doivent être prises en compte pour éviter des blessures graves aux personnes et/ou des dommages à l'équipement :*

- *Ne pas toucher les bornes d'alimentation de l'appareil (alimentation et phases) car elles peuvent véhiculer des tensions dangereusement élevées > 50 V.*
- *Ne jamais connecter ou déconnecter l'appareil lorsque l'alimentation est en marche afin d'éviter tout danger pour le personnel, la formation d'arcs électriques ou de contacts électriques indésirables.*
- *Déconnectez l'appareil de toutes les sources d'alimentation avant de procéder à tout changement de câblage.*
- *La surface de l'appareil peut dépasser 100 ºC pendant le fonctionnement et peut causer de graves brûlures au contact direct.*
- *Après avoir éteint et déconnecté toutes les sources d'alimentation de l'appareil, attendez au moins 10 secondes avant de toucher une partie quelconque de l'appareil, car il peut rester chargé électriquement ou être chaud.*

3.4.2. *Précautions*

Les déclarations suivantes doivent être prises en compte pour éviter des blessures graves aux personnes qui effectuent les procédures et/ou des dommages à l'équipement :

- *Respectez toujours les conditions de connexion et les spécifications techniques. En particulier en ce qui concerne la section des fils et la mise à la terre.*
- *Certains composants se chargent électriquement pendant et après le fonctionnement.*
- *L'alimentation électrique connectée à ce contrôleur doit être conforme aux paramètres spécifiés dans ce manuel.*
- *Lorsque vous connectez ce variateur à une source d'alimentation approuvée, faites-le par une ligne séparée de toute tension dangereuse éventuelle, en utilisant l'isolation nécessaire conformément aux normes de sécurité.*
- *Les équipements de control de mouvement à haute performance peuvent se déplacer rapidement avec des forces très élevées. Un mouvement inattendu peut se produire, notamment lors de la mise en service du produit. Restez à l'écart de toute machine opérationnelle et ne la touchez jamais pendant qu'elle fonctionne.*
- *N'effectuez aucune connexion à un circuit interne. Seules les connexions à des connecteurs désignés sont autorisées.*
- *Tous les travaux d'entretien et de maintenance doivent être effectués par un personnel qualifié.*
- *Avant de mettre le le contrôleur en marche, vérifiez que toutes les précautions de sécurité ont été prises, ainsi que les procédures d'installation.*

4. Product Description

Main features:

- Ultra-small footprint
- Up to 80 V_{DC}, 45 A continuous
- Up to 98% efficiency
- Up to 50 kHz current loop, 25 kHz servo loops
- 10 kHz ~ 100 kHz PWM frequency
- 16 bit ADC with VGA for current sensing
- Supports Halls, Quadrature encoder, SSI and BiSS-C
- Up to 4 simultaneous feedback sources
- Full voltage, current and temperature protections
- Safety Torque Off (STO SIL3 Ple) inputs

Typical applications:

- Collaborative robot joints
- Robotic exoskeletons
- Wearable robots
- AGVs
- UAVs
- Industrial highly integrated servomotors
- Smart motors
- Battery-powered and e-Mobility
- Low inductance motors

4.1. Part Numbering

Product	Ordering part number	Status	Image	Label
Everest XCR	EVE-XCR-E	PRODUCTION	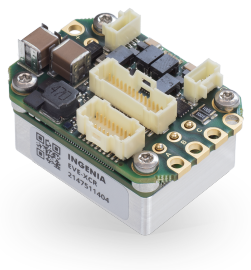	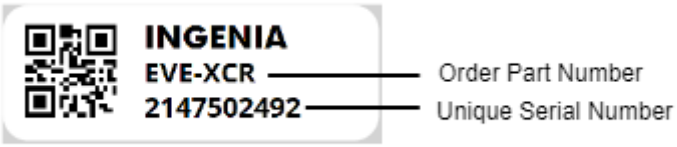

Product	Ordering part number	Status	Image	Label
Ready-to-use servo drive featuring EtherCAT communications.				

Product	Ordering part number	Status	Image	Label
Everest XCR Ready-to-use servo drive featuring CAN	EVE-XCR-C	PRODUCTION		

Product	Ordering part number	Status	Image	Label
open and Ethernet communications.				

Product	Ordering part number	Status	Image	Label
Everest XCR Ready-to-use servo drive featuring CAN	EVE-XCR	DISCONTINUED		

Product	Ordering part number	Status	Image	Label
open and Ethernet communications.				

For applications requiring a pluggable drive enabled with EtherCAT or CANopen, please see Everest NET.

For applications not requiring CANopen or EtherCAT, please see **Everest CORE**.

4.2. Specifications

Part number →	EVE-XCR-E	EVE-XCR-C
Electrical and power specifications		

Minimum power supply voltage	8 V_{DC}
Maximum absolute power supply voltage	80 V_{DC} (continuous) 85 V_{DC} (peak 100 ms) Working at 80 V will require a stable power supply able to absorb any possible reinjection coming back from the driver.
Recommended power supply voltage	12 V_{DC} ~ 72 V_{DC} This voltage range ensures a safety margin including power supply tolerances and regulation during acceleration and braking.
Internal drive DC bus capacitance	47 µF Note that EVE-XCR uses ceramic capacitors. The capacitance value varies with DC bias and temperature.
Logic power supply voltage (optional)	8 to 50 V_{DC} Providing the logic supply is optional, as the drive is supplied from the DC bus (single supply) on its full operating voltage range. When supplied from logic, an intelligent switch will stop consuming from the DC bus.
Nominal phase continuous current	45 A @ 60 °C Typically, 45 A can be obtained working at 48 V, 20 kHz and with an appropriate cooling to keep case temperature under 60 °C. On higher temperatures, an automatic current derating will be applied to protect the system. See Thermal and Power Specifications below. For disambiguation on current definitions please see Disambiguation on current values and naming for Ingenia Drives.
Maximum phase peak current	60 A @ 1 sec Notice, that peak current could be limited by an automatic current derating algorithm. In order to get 60 A, case temperature should be kept below 35 °C.
Short circuit protection	By active hardware detection. Short circuit detection level: 100 A ~ 250 A max. < 10 µs.
Maximum continuous output power	4200 W
Efficiency	Up to 98% @ 20 kHz, 80 V, 30 A
Bus voltage utilization	> 97% @ 20 kHz, 80 V, voltage mode, no load

Standby power		2.4 W ~ 3.2 W with power stage disabled. *See detailed standby power consumption below.
Motion control specifications		
Supported motor types	• Rotary brushless (SVPWM and Trapezoidal) • Rotary brushed (DC)	
Power stage PWM frequency (configurable)	10 kHz, 20 kHz (default), 50 kHz & 100 kHz	
Current sensing	3 phase, shunt based current sensing. 16 bit ADC resolution. Accuracy is ±2% full scale.	
Current sense resolution (configurable)	Current gain is configurable in 4 ranges: • 2.475 mA/count • 1.352 mA/count • 0.570 mA/count • 0.379 mA/count	
Current sense ranges (configurable)	Current ranges for the 4 configurable current gains: • ±81.1 A • ±44.3 A • ±18.7 A • ±12.4 A	
Max. Current loop frequency	50 kHz	
Max. servo loops frequency **(position, velocity & commutation)**	25 kHz @ 50 kHz current loop	

Feedbacks	• Digital Halls (Single ended)
	• Quadrature Incremental encoder (RS-422 or Single ended)
	• Absolute Encoder (RS-422 or Single ended): up to 2 at the same time, combining any of the following:
	  • BiSS-C (up to 2 in daisy chain topology)
	  • SSI	

Supported target sources	EtherCAT	CANopen

Control modes	• Cyclic Synchronous Position • Cyclic Synchronous Velocity • Cyclic Synchronous Current • Profile Position (trapezoidal & s-curves) • Profile Velocity • Interpolated Position (P, PT, PVT) • Homing
Inputs/outputs and protections	
General purpose Inputs and outputs	4 x non-isolated single-ended digital inputs - 5 V logic level & 3.3 V compatible. Can be configured as: • General purpose • Positive or negative homing switch • Positive or negative limit switch • Quick stop input 4 x non-isolated single-ended digital outputs - 5 V logic level (continuous short circuit capable with 470 Ω series resistance) - 8 mA max. current. Can be configured as: • General purpose • Operation enabled event flag • External shunt braking resistor driving signal 1 x ±10 V, 16 bit, fully differential analog input for load cells or torque sensors. Can be read by the Master to close a torque loop.
Shunt braking resistor output	Configurable over any of the digital outputs (see above). Enabling this function would require an external transistor or power driver.
Motor brake output	1 A, 50 V, dedicated brake output. Open drain with re-circulation diode. Brake enable and disable timing can be configured accurately. PWM modulation available to reduce brake voltage and power consumption.
Safe Torque OFF inputs	2 x dedicated, isolated (> 4 GΩ, 1 kV) STO inputs (from 3.3 V to 30 V). The STO inputs include a current limiter at ~ 5 mA to minimize losses. Details: Safe Torque Off (STO).
Motor temperature input	1 x dedicated, 5 V, 12-bit, single-ended analog input for motor temperature (1.65 kΩ pull-up to 5 V included). NTC, PTC, RTD, Linear Voltage Sensors , Silicon Based Sensors and Switches are supported.

Protections	• Hardcoded / hardwired Drive protections:
	  • Automatic current derating on voltage, current and temperature
	  • Short-circuit Phase to DC bus
	  • Short-circuit Phase to Phase
	  • Short-circuit Phase to GND
	• Configurable protections:
	  • DC bus over-voltage
	  • DC bus under-voltage
	  • Drive over-temperature
	  • Drive under-temperature
	  • Motor over-temperature (requires external sensor)
	  • Current overload (I^2t). Configurable up to Drive limits
	  • Voltage mode over-current (with a closed current loop, protection effectiveness depends on the PID).
	• Motion Control protections:
	  • Halls sequence / combination error (Pending implementation)
	  • Limit switches
	  • Position following error
	  • Velocity / Position out of limits	

Communications for Operation		
EtherCAT	CANopen over EtherCAT (CoE) File over EtherCAT (FoE) Ethernet over EtherCAT (EoE)	Not available
CANopen / Ethernet	Not available	CiA-301, CiA-303, CiA-305, CiA-306 and CiA-402 (4.0) compliant. 125 kbps to 1 Mbps (default). Non isolated. Termination resistor not included. Note: Ethernet ports can be used to configure the drive.
Environmental conditions		
Aluminum case	Yes (interface board not covered). Minimum wall thickness > 0.75 mm.	
Isolation between aluminum case and live circuits	Basic insulation according to IEC 61800-5-1. > 200 MΩ. Measured between PE (case) and GND_P and +SUP and phases. Note: The drive includes 2 nF EMC capacitance between the power supply negative (GND_P) and the enclosure (PE).	

Case temperature	Operation: • -20 ºC to +60 ºC at full current (-40 °C on Extended version option) • +60 ºC to +85 ºC with derated current For further information, see Thermal Specifications below. Storage: ▪ -40 ºC to +100 ºC
Maximum humidity	5% ~ 85% non-condensing
Maximum Operating Altitude	2000 m
Pollution degree and installation environment	Pollution Degree 2 environment according to IEC 61800-5-1: Normally, only non-conductive pollution occurs. Occasionally, a temporary conductivity caused by condensation is to be expected when the Everest is off.
Minimum index of protection of the installation	IP3X: Since Everest has accessible live electrical circuits, it should be installed on closed electrical operating areas with a minimum protection rating of IP3X and should be accessed by skilled or instructed persons.
MTBF	> 360.000 h Based on FIDES method for Standard Life Profile at 40 °C average. Other scenarios available on demand.
Mechanical specifications	
Dimensions	42 mm x 29 mm x 23.2 mm Dimensions include mating connectors
Weight	38 gr
Compliance	

Certifications	**CE Marking** • **RoHS 3:** Restriction of Hazardous Substances Directive (2011/65/UE + 2015/863/EU) • **LVD:** Low voltage directive (2014/35/EU) • **EMC:** Electromagnetic Compatibility Directive (2014/30/EU) • **Safety:** Machinery Directive (2006/42/EC) **Safe Torque Off (STO)** • IEC 61800-5-2:2016 : SIL3 • IEC 61508:2010 : SIL3 • EN ISO 13849-1:2015 : PLe Cat. 3 **Electromagnetic Compatibility (EMC)** • IEC 61800-3:2017 • IEC 61000-6-2:2016 **Environmental Testing** • IEC 60068-2-1:2007 • IEC 60068-2-2:2007 • IEC 60068-2-38:2009 • IEC 60068-2-78:2012 • IEC 60068-2-6:2007 • IEC 60068-2-27:2008

4.3. Product Revisions

Revision	Date	Notes
1	01 Jun 2018	Initial prototype
2	01 Oct 2018	Second prototype. Known issues or pending features: • Ethernet physical layer is affected by commutation noise
3	20 Dec 2018	Known issues or pending features: • Noisy phase current measurement (+/- 150 mA) • CANopen under development • Trapezoidal commutation under development • Halls errors under development • Efficiency & Bus voltage not yet measured empirically • STO certification pending
4	14 Apr 2019	First official product release.
5	24 Mar 2019	• Added CANopen variant • Added trapezoidal commutation • Improved current sensing measurement
6	24 May 2019	• Improvements related to industrialization
7	30 Jan 2020	• Improvements related to industrialization
8	11 Sep 2020	• STO certified

4.4. Thermal and Power Specifications

4.4.1. Standby power consumption

The following table shows the standby power consumption of the Everest assuming 1 EtherCAT port is active and communicating at full speed, no feedbacks or I/Os are connected. When the power stage is enabled, motor current is set to 0 and housing temperature is kept at 50ºC.

Power supply voltage	Typical total standby power consumption with single supply					Power savings by having dual supply and logic at 12 V*
	Power stage disabled	Power stage enabled and switching at 0 current				
		10 kHz	20 kHz	50 kHz	100 kHz	
12 V	2.50 W	2.50 W	2.54 W	2.62 W	2.74 W	~0.0 W
24 V	2.60 W	2.66 W	2.72 W	2.91 W	3.24 W	~0.10 W

Power supply voltage	Typical total standby power consumption with single supply					Power savings by having dual supply and logic at 12 V*
	Power stage disabled	Power stage enabled and switching at 0 current				
		10 kHz	20 kHz	50 kHz	100 kHz	
48 V	2.85 W	3.07 W	3.26 W	3.80 W	4.70 W	~0.35 W
60 V	2.94 W	3.34 W	3.61 W	4.38 W	5.66 W	~0.44 W
72 V	3.10 W	3.34 W	3.97 W	5.00 W	6.70 W	~0.60 W

*If minimal standby power consumption is desired working at 48 V or higher it is suggested to have dual supply and provide 12 V or 24 V to the Logic. This reduces losses by allowing the main DC/DC converter to operate at peak efficiency.

4.4.2. Thermal model

The following diagram depicts the general dissipation model. The Everest is designed to be mounted on a cooling plate or heatsink to achieve its maximum ratings. Please see Installation for more details. In order to calculate the heatsink requirements, the power dissipation can be estimated below.

In some low power applications, the Everest can be NOT mounted to any heatsink. In this case its thermal resistance from housing/case to ambient $\mathbf{R_{th(h-a)}}$ can be estimated between 8 K/W, to 12 K/W assuming 10 cm clearance to allow air convection at sea level. For example, with the drive on standby at 2.6 W losses at 25 °C air temperature the internal drive temperature can be 56 °C. When the Everest is not attached to a heatsink factors like air cooling, power cable thickness will have a significant effect on its temperature. Typically 7 W can be dissipated without heatsink, refer to the graph below to know which current can be handled.

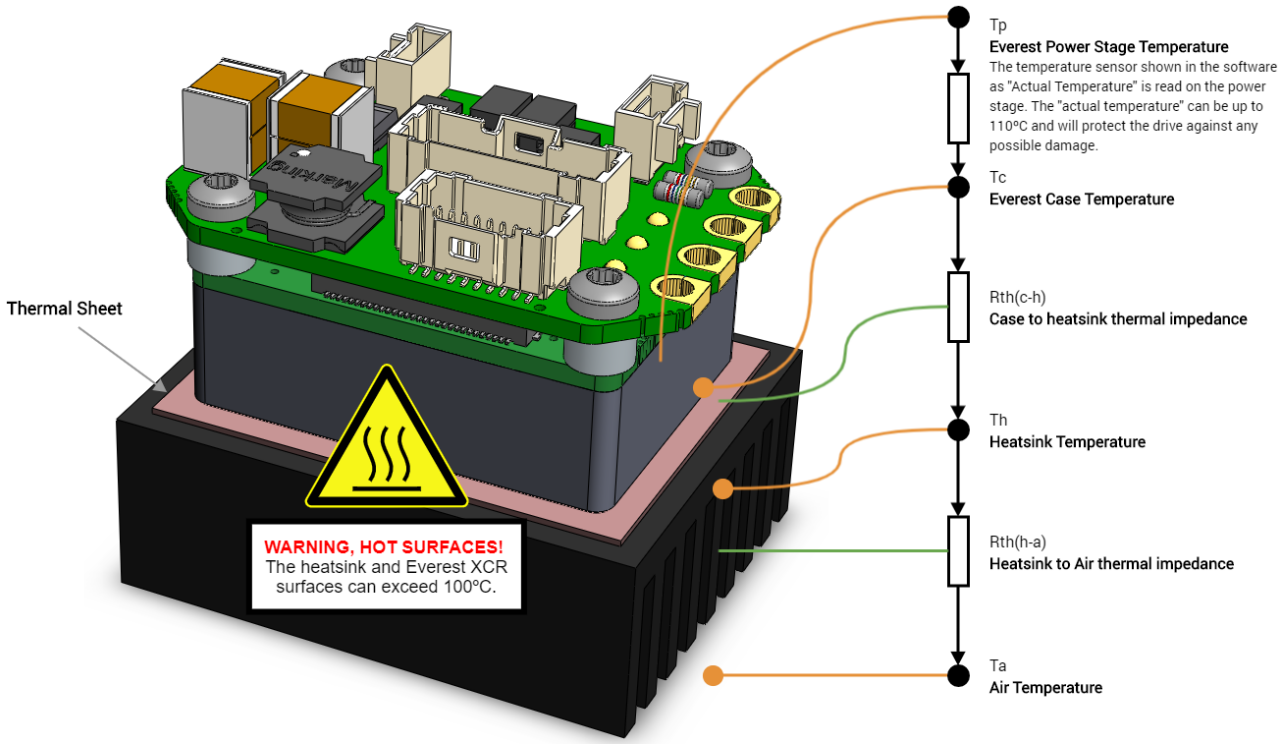

4.4.3. Current derating

The following figure show the maximum motor phase current at different case temperatures and operating points. As can be seen lower temperature, bus voltage or PWM frequency allows higher current due to lower heat dissipation. For highest current, Everest can be configured at 10 kHz PWM frequency, however this may not be suitable for low inductance motors or acoustic noise sensitive applications. The graph expresses the achievable current including the derating algorithm that limits the current based operation conditions and the power stage temperature.

Notice that current is expressed in crest value for a 3 phase BLAC motor. For further clarifications and conversion to equivalent RMS values please refer to Disambiguation on current values and naming for Ingenia Drives.

To ensure a proper performance of Everest XCR, the **case temperature should be held always below 85 ºC ($T_{c\text{-}max}$ = 85 ºC).**

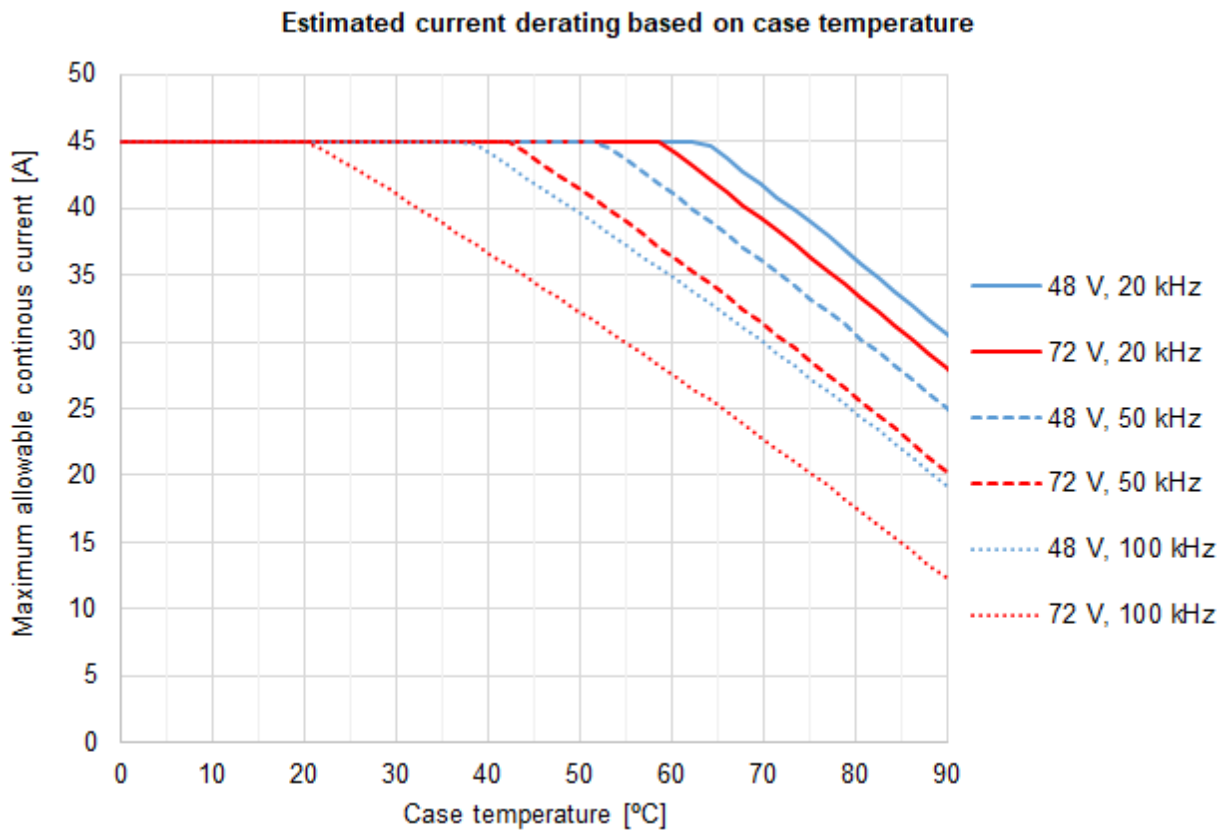

4.4.4. Heat dissipation and heatsink calculation

Following figure show the total power losses at different operating points. This includes logic supply and considers a single supply scenario. As can be seen, lower PWM frequency and voltage leads to lower power losses.

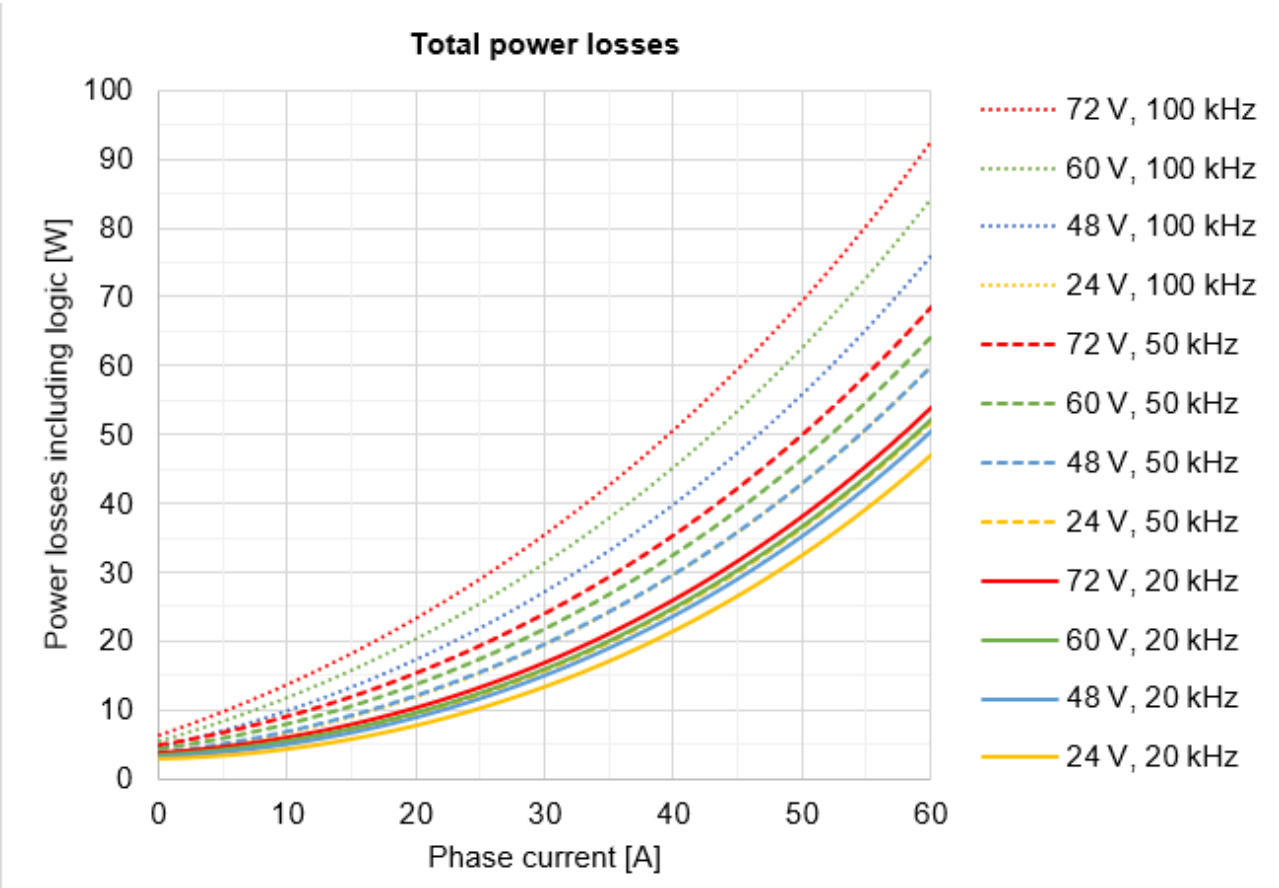

Please, use the following procedure to determine the required heatsink:

1. Based on the voltage & continuous (averaged) current required by your application and Current derating graph determine the Case temperature **T_c**. Remember that Case temperature must be always below 85 °C (T_c < 85 °C)
    a. For example: If the application requires 30 A @ 72 V (20 kHz) the T_c will be 85 °C
2. Based on the voltage & continuous current required by your application and Power losses graph determine the generated Power Losses **P_L** to be dissipated.
    a. For example: If the application requires 30 A @ 72 V (20 kHz) the P_L will be 25 W
3. Determine the Thermal impedance of the used thermal sheet **$R_{th(c-h)}$**
    a. For example, a thermal sheet TGX-150-150-0.5-0, which has an estimated thermal impedance of $R_{th(c-h)}$ = 0.2 K/W
4. Based on the ambient temperature and using the following formula determine the maximum thermal impedance to air of the required heatsink **$R_{th(h-a)}$**

$$R_{th(h-a)} \leq \frac{T_c + P_L \cdot R_{th(c-h)} - T_a}{P_L}$$

    a. For example: If the application requires 30 A @ 72 V (20 kHz) working at T_a = 25 °C and we use a thermal sheet with $R_{th(c-h)}$ = 0.2 K/W the required thermal impedance of the heatsink will be $R_{th(h-a)}$ = 2.6 K/W

4.4.5. Energy efficiency

The following graph shows the electrical **energy efficiency including logic** for various operation points assuming 50 °C case temperature and the drive delivering the maximum output power (i.e. maximum output voltage and motor speed). As seen, very high efficiencies > 99% can be achieved at 10 kHz or 20 kHz PWM frequencies.

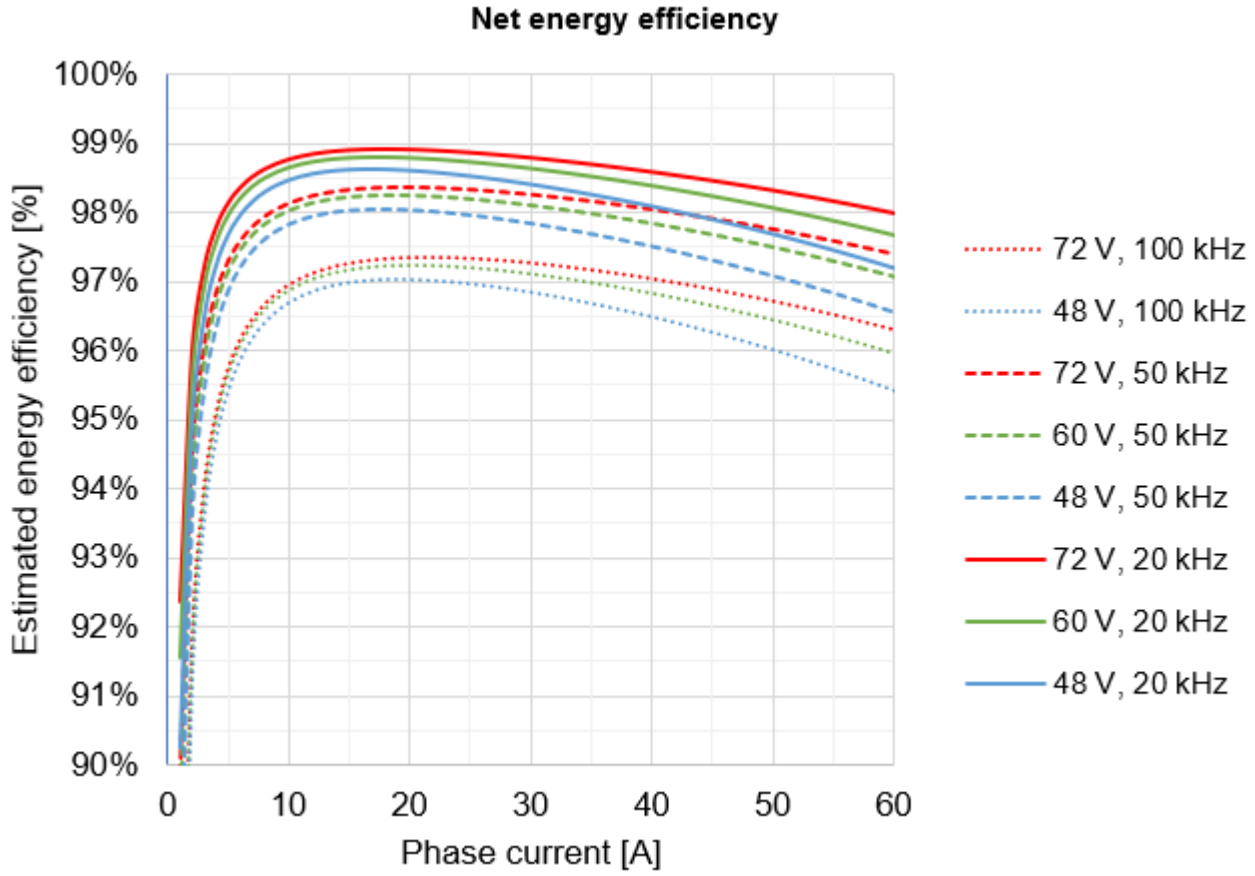

5. EtherCAT specifications

Ports available	2
LED Signals	Status LED
	Link/Act LED
Supported Mailbox	CoE, FoE, EoE
SDO info	Supported
Segmented SDO	Supported
SDO complete access	Supported
Modes of Operation	DS402 drive device profile
	Voltage mode
	Current mode
	Cyclic Synchronous Current Mode (Note 1)
	Current amplifies mode
	Profile Velocity
	Profile Position
	Homing modes
	Interpolated Position Mode
	Cyclic Synchronous Position Mode (Note 1)
	Cyclic Synchronous Velocity Mode (Note 1)
Synchronization modes	SM synchronous
	Distributed clock
Process data object	Configurable
	Up to 64 bytes in each direction

EtherCAT® is a registered trademark and patented technology, licensed by Beckhoff Automation GmbH, Germany.

Note 1: *Max. Update rate up to 250 µs (4 kHz) to keep a latency of 2-3 cycles*
Using PWM ≥ 50 kHz & PDO size 11 bytes

6. CANopen Specifications

Ports available	1 CAN port
LED Signals	CANopen run LED (according to CiA-303)
	CANopen error LED (according to CiA-303)
Modes of operation	CiA-402 drive device profile
	• Voltage mode • Current mode • Cyclic synchronous current mode • Current amplifier mode • Profile velocity • Profile position • Homing modes • Cyclic synchronous position mode • Cyclic synchronous velocity mode
Process data object	RPDO and TPDO 1 to 4 are available.
	Up to 32 bytes on each direction.
	Up to 15 **different** registers can be mapped on each direction.
	Synchronous or asynchronous transmission and reception.
Service data object	Supported.
EMCY	Supported.
	Device node-ID and baudrate can be configured using this service.
	Fast-scan service is supported.
Life guard protocol	Implemented.
Heartbeat	Supported heartbeat producer.
Time Stamp	Supported time stamp consumer.

7. Connectors Guide

7.1. Connector Overview

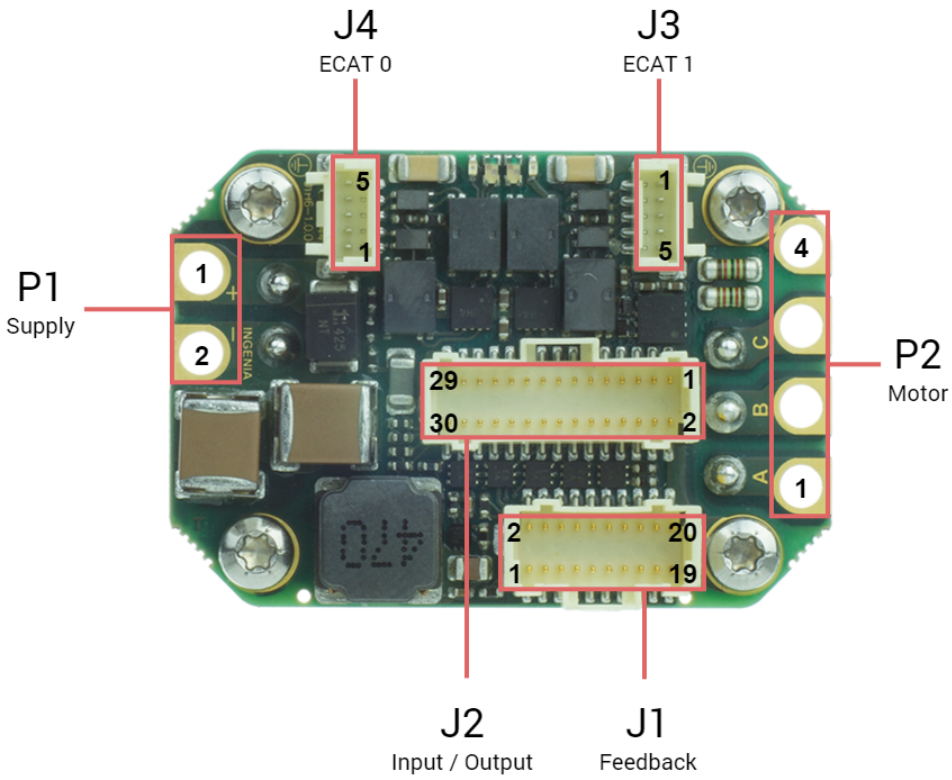

7.2. Supply

P1 connector			
2.6 mm diameter gold plated solder pads or flying leads option. Pad pitch is 5.08 mm.			
Pin	**Signal**	**Function**	**Warning! Risk of electric shock!**
1	POW_SUP	Power supply positive	
2	GND_P	Power supply return	
Notes			

Warning, power supply and motor terminals can have dangerous voltages in excess to 50 V and cause electric shock. Never touch them directly while in operation. The end installation must ensure that these terminals are not accessible.

Recommended section wire is 2.5 mm^2 ~ 8.4 mm^2 , AWG 13 ~ AWG 8. High-temperature materials are necessary (≥ 180 ºC). See Wiring and Connections - Power Supply and Motor Power for more detailed information about the required wire section. Adapt the cable diameter to the worst-case current needs.

It is recommended to use flexible silicone or Teflon cables with high-temperature ratings ≥ 180 ºC. The diameter of the cable jacket (insulator) should be less than 5.08 mm to prevent collision between wires.

The cables must always be mechanically secured after soldering.

When using power supply only (no logic supply) it is recommended to connect pins 27 (+LOG_SUP) and 29 (GND_D) of I/O connector J2 together.

7.3. Motor

P2 connector

2.6 mm diameter gold plated solder pads or flying leads option. Pad pitch is 5.08 mm.

Pin	Signal	Function	Warning! Risk of electric shock!
1	PH_A	Motor phase A	
2	PH_B	Motor phase B	
3	PH_C	Motor phase C	
4	PE	Protective earth connection, internally connected to standoffs and drive housing.	

Notes

Warning, power supply and motor terminals can have dangerous voltages in excess to 50 V and cause electric shock. Never touch them directly while in operation. The end installation must ensure that these terminals are not accessible.

Recommended section wire is 2.5 mm^2 ~ 8.4 mm^2 , AWG 13 ~ AWG 8. High-temperature materials are necessary (≥ 180 ºC). See Wiring and Connections - Power Supply and Motor Power for more detailed information about the required wire section.

The cables must be mechanically secured after soldering.

For long cables, it is essential to use a shielding connected to protective earth at both ends of the cable.

7.4. Feedback Connector

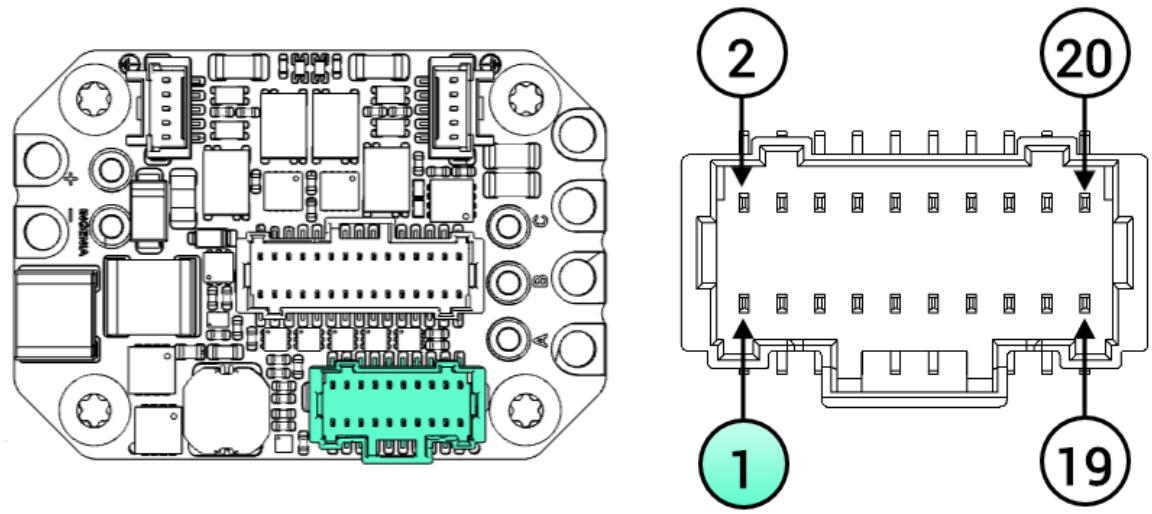

J1 connector		
20 pins 2 row Pico-Clasp 1 mm pitch header. Molex 501190-2027		
Pin	**Signal**	**Function**
1	+5V_OUT	5 V 200 mA total max. Pins 1, 9, 14 are internally connected.
2	GND_D	Digital signal ground
3	ENC_A+/DATA2+	Differential digital incremental encoder: A+ input Single-ended digital incremental encoder: A input Absolute encoder 2: Data +
4	ENC_B+	Differential digital incremental encoder: B+ input Single-ended digital incremental encoder: B input
5	ENC_A-/DATA2-	Differential digital incremental encoder: A- input Single-ended digital incremental encoder: Leave unconnected Absolute encoder 2: Data -
6	ENC_B-	Differential digital incremental encoder: B- input Single-ended digital incremental encoder: Leave unconnected
7	ENC_Z+/CLK2+	Differential digital incremental encoder: Index+ input Single-ended digital incremental encoder: Index input Absolute encoder 2: Clock +

8	ENC_Z-/CLK2-	Differential digital incremental encoder: Index- input Single-ended digital incremental encoder: Leave unconnected Absolute encoder 2: Clock -
9	+5V_OUT	5 V 200 mA total max. Pins 1, 9, 14 are internally connected.
10	GND_D	Digital signal ground
11	HALL_1	Digital hall sensor input 1
12	HALL_2	Digital hall sensor input 2
13	HALL_3	Digital hall sensor input 3
14	+5V_OUT	5 V 200 mA total max. Pins 1, 9, 14 are internally connected.
15	GND_D	Digital signal ground
16	DATA1+	Absolute encoder 1 DATA positive signal input
17	CLK1+	Absolute encoder 1 CLK positive signal output
18	DATA1-	Absolute encoder 1 DATA negative signal input. For single-ended absolute encoders with TTL or CMOS levels leave this pin floating and connect the signal to DATA+.
19	CLK1-	Absolute encoder 1 CLK negative signal output. For single-ended absolute encoders with TTL or CMOS levels leave this pin floating and connect the clock to CLK+.
20	PE	Protective earth connection, internally connected to standoffs and drive housing. For systems where the drive is not integrated inside the motor, the PE pin should typically be connected to the feedback cable shield to protect it against electromagnetic interferences. To do so it is recommended to use a cable shield terminator like TE S02-16-R.

7.5. Input / Outputs Connector

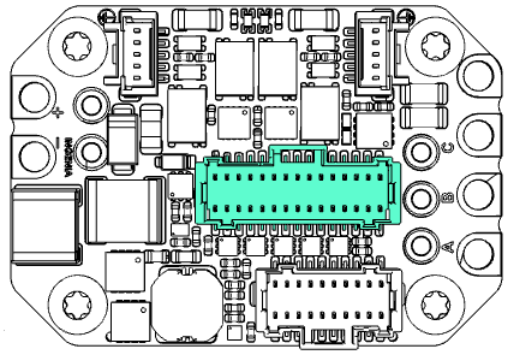

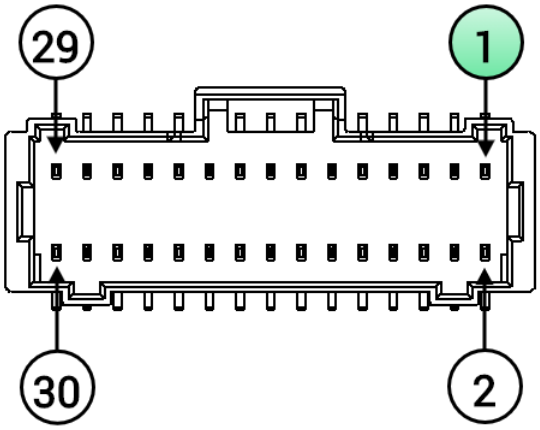

J2 connector		
30 pins 2 row Pico-Clasp 1 mm pitch header. Molex 501190-3017		
Pin	**Signal**	**Function**
1	STO_1	Safe Torque Off input 1 (positive, active from 5 V to 30 V, ISOLATED)
2	PE	Protective earth connection, internally connected to standoffs and drive cold plate. Can be used to connect cable shield. To do so it is recommended to use a cable shield terminator like TE S02-16-R.
3	STO_RET	Safe Torque Off common (optocoupler LEDs cathode, ISOLATED).
4	+5V_OUT	+5 V output, can be used for STO circuit.
5	STO_2	Safe Torque Off input 2 (positive, active from 5 V to 36 V, ISOLATED)
6	GND_D	Digital signal ground
7	NC	Intentionally not connected.
8	+5V_OUT	+5 V output, can be used for STO circuit.
9	CAN_H	CAN bus line dominant high
10	RESERVED	Reserved
11	CAN_L	CAN bus line dominant low
12	RESERVED	Reserved
13	GND_D	Digital signal ground
14	IN1	Digital input 1 (5V levels)
15	IN2	Digital input 2 (5V levels)

16	IN3	Digital input 3 (5V levels)
17	IN4	Digital input 4 (5V levels)
18	OUT1	Digital output 1 (5V levels)
19	OUT2	Digital output 2 (5V levels)
20	OUT3	Digital output 3 (5V levels)
21	OUT4	Digital output 4 (5V levels)
22	AN1+	Analog input 1 positive (±10V range)
23	BRAKE_OUT	Brake output (open-drain transistor with PWM capability). A freewheeling diode anode is connected to this pin.
24	AN1-	Analog input 1 negative (±10V range). Connect to GND if a single-ended analog input is used.
25	BRAKE_DIODE_K	The cathode of the freewheeling diode for the brake should be connected to the power supply of the brake. The anode of the diode is connected to pin 23 (BRAKE_OUT).
26	GND_D	Digital signal ground
27	+LOG_SUP	Logic supply positive. Providing the logic supply is optional as the drive is automatically powered from the DC bus on its full operating voltage range. Logic supply can be used to keep communications alive while the power bus is off. Powering the logic from this input at 12 V or 24 V reduces overall standby losses and drive self-heating since the main DC/DC converter of the drive has better efficiency at lower voltages.
28	MOTOR_TEMP	Motor temperature sensor input. A 1.65 kΩ pull-up resistor to 5 V is included on the drive.
29	GND_D	Digital signal ground, logic supply negative
30	MOTOR_TEMP_RET	Motor temperature sensor return (referred to GND_D). Do not use this pin as GND for any other purpose than the negative for motor temperature sensing.

7.6. EtherCAT Connectors

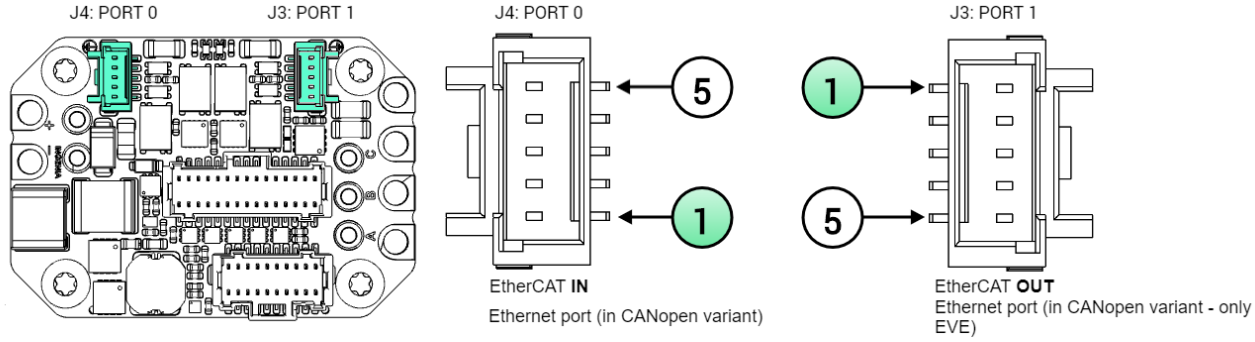

J3 & J4 connectors				
5 pins 1 row Pico-Clasp 1 mm pitch header. Molex 501940-0507				
Pin	**Signal**	**Function**	**Suggested pinout M12-4 D-coded**	**Suggested pinout RJ45**
1	TX_D+	Transmit Data+ line. Colour typ.: White - **Orange**	1	1
2	TX_D-	Transmit Data- line. Colour typ.: **Orange**	3	2
3	RX_D+	Receive Data+ line. Colour typ.: White - **Green**	2	3
4	RX_D-	Receive Data- line. Colour typ.: **Green**	4	6
5	GND_ETH/PE	Connection for the EtherCAT cable shield. This pin is directly connected to the chassis of the drive - PE. To do so it is recommended to use a cable shield termination like TE S02-16-R.	Housing / Shield	Shroud / Shield
Note				
Both network connectors have the same pinout, thanks to auto-negotiation there is no need to make crossed-cables. I.e. TX+ of one device can be connected to TX+ of another. Note that port 0 should be used as EtherCAT IN and port 1 as EtherCAT OUT.				

7.7. Mating Connectors

J1 mating connector	
Description	Molex Pico-Clasp™ 1.0 mm pitch 20 positions dual row receptacle with locking ramp

J1 mating connector	
Image	
Part number	Molex 501189-2010

J2 mating connector	
Description	Molex Pico-Clasp™ 1.0 mm pitch 30 positions dual row receptacle with locking ramp
Image	
Part number	Molex 501189-3010

J3 & J4 mating connectors with latch holder	
Description	Molex Pico-Clasp™ 1.0 mm pitch 5 positions single row receptacle with **Latch Holder.** Provides stronger locking performance and is easy to extract. Use this connector in case the wiring ensures no strong pull will be performed to the cables, this could cause damage to the PCB connector.
Image	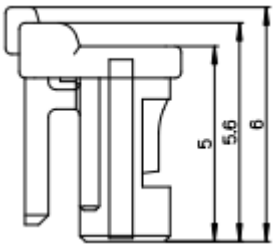
Part number	Molex 501939-0500
J3 & J4 mating connectors with locking ramp	

Description	Molex Pico-Clasp™ 1.0 mm pitch 5 positions single row receptacle with **locking ramp**. Provides less strong locking compared to the latch holder but will avoid breaking the PCB connector in case of strong pull.
Image	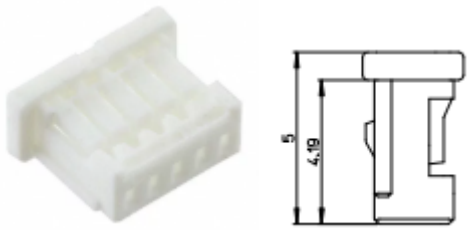
Part number	Molex 501330-0500

7.7.1. Common mating terminals and cables for all signal connectors

All signal connectors are of Molex Pico-Clasp™ family. All share the same crimp terminals and jumper wires. Given the small size of the connectors, crimping must be done with appropriate tools and application guides provided by Molex. Otherwise, it is strongly recommended to buy pre-crimped jumper wires and connect to your system using split (or butt) terminals. Spiral wraps are recommended to order and protect the thin wires and make tidy, elegant wiring.

J1, J2, J3, J4 Crimp terminals	
Description	Molex Pico-Clasp™ crimp socket 28 AWG ~ 32 AWG selective gold plated
Image	
Part number	Molex 5011933000
Crimper tool	
Description	Hand crimper tool 28-32 AWG
Part number	Molex 63819-1500

J1, J2, J3, J4 Crimped wires 150 mm	
Description	Molex Pico-Clasp™ 28 AWG black jumper lead socket to socket 150 mm length. Gold plated.
Image	
Part number	Molex 079758-1016
J1, J2, J3, J4 Crimped wires 300 mm	
Description	Molex Pico-Clasp™ 28 AWG black jumper lead socket to socket 300mm length. Gold plated.
Image	
Part number	Molex 079758-1017
Wiring accessory: Spiral wire wrap	
Description	Nylon spiral wrap abrasion resistant. Internal diameter: 2.41 mm, 3.18 mm expanded | 5.08 mm, 6.35 mm expanded
Image	
Part number	Alpha Wire SW20 NA005 | SW21 NA008
Wiring accessory: wire to wire solder sleeve	
Description	Wire to Wire Solder Sleeve Heat shrinkable. Can be used to reliably connect pre-crimped wires to a specific sensor, feedback, or other thin wires.

Image	
TE	B-155-9001

8. Signalling LEDs

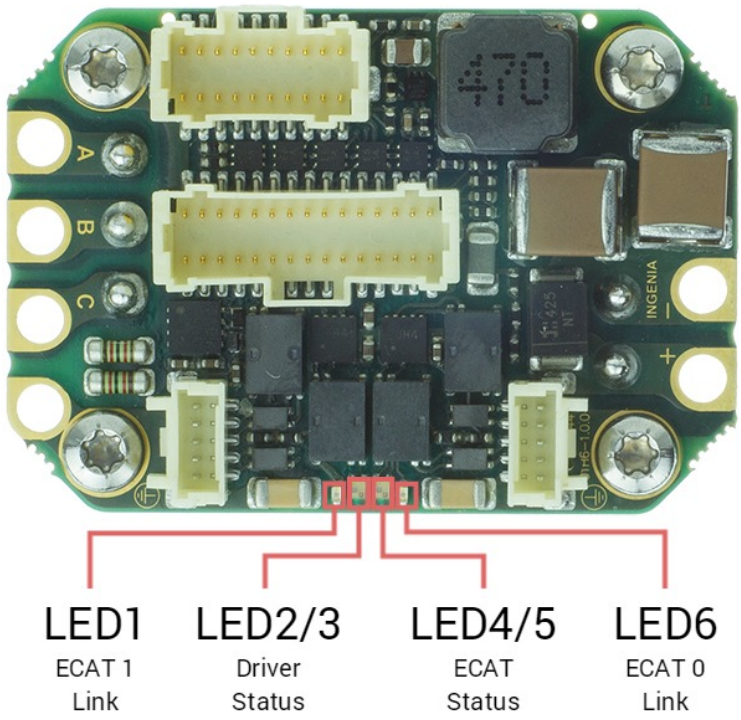

The drive provides information through 6 signalling LEDs:

- **EtherCAT / Ethernet 0 link (ECAT 0):** LED 6 green
- **EtherCAT 1 link (ECAT 1):** LED 1 green
- **Driver Status:** Two LEDs indicate the driver status. Notice that, LED2 & LED3 (one bi-color red/green) are grouped into a single package.
- **EtherCAT / CANopen Status (ECAT Status):** Two LEDs indicate the EtherCAT or CANopen status. LED4 & LED5 (one bi-color red/green) are grouped into a single package.

The meaning of the signaling depends on the product variant.

8.1. LED Signal Definitions

LED signal	Description
On	The LED is constantly on.
Off	The LED is constantly off.

LED signal	Description
Flickering	The LED flickering will have an On and Off sequence with a frequency of approximately 10 Hz: on for approximately 50 ms and off for approximately 50 ms. 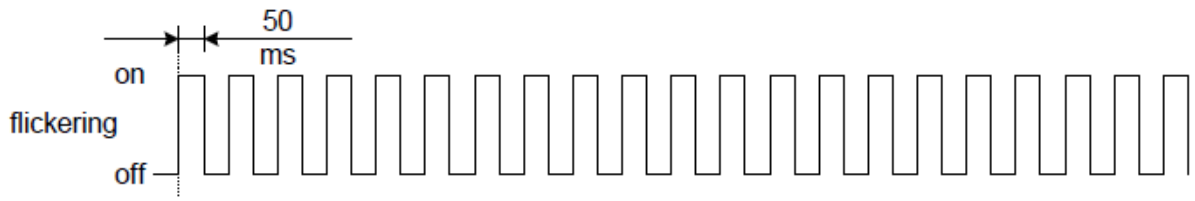
Blinking	The LED blinking will have an On and Off sequence with a frequency of approximately 2,5 Hz: On for approximately 200 ms followed by Off for approximately 200 ms. 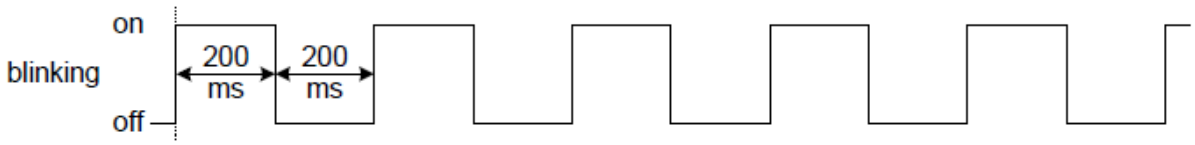
Single flash	The LED will have a short flash (approximately 200 ms) followed by a long off phase (approximately 1000 ms). 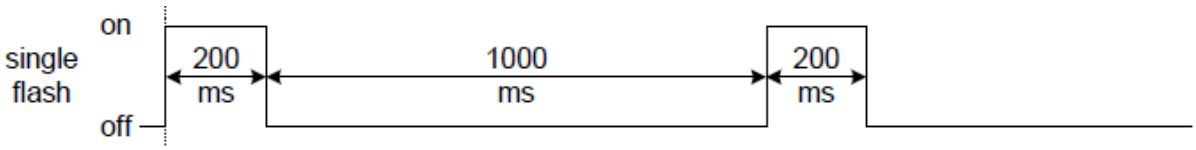
Double flash	The LED will have a sequence of two short flashes (approximately 200 ms), separated by an off phase (approximately 200 ms). The sequence is finished by a long off phase (approximately 1000 ms). 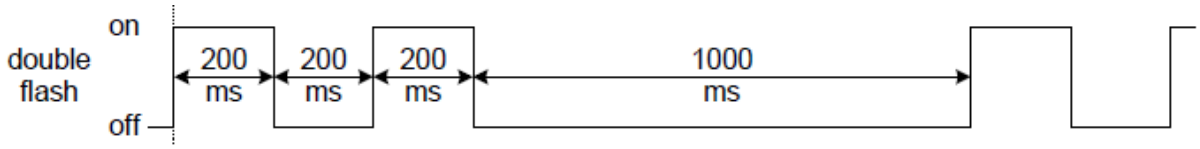

LED signal	Description
Triple flash	The LED will have a sequence of three short flashes (approximately 200 ms), separated by an off phase (approximately 200 ms). The sequence is finished by a long off phase (approximately 1000 ms). 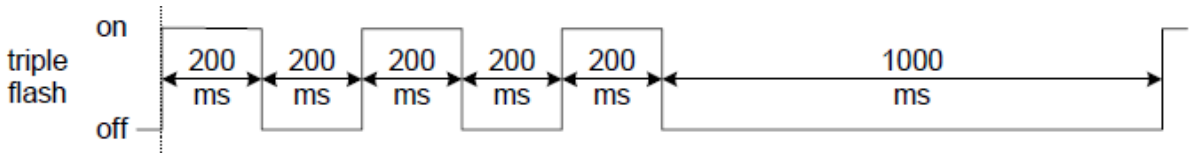

8.2. EtherCAT protocol (EVE-XCR-E)

Identified	Group	Name	Color	Meaning
LED2	Driver Status	RESERVED	**Green**	Reserved
LED3		FAULT	**Red**	LED is on when an error event has occurred and the drive is in the **Fault state (CiA-402)**. In any other state the LED will remain off.
LED4	EtherCAT / CANopen Status One Bi-color LED provides information about the EtherCAT communication status, according to EtherCAT specification.	RUN LED	**Green**	**LED signal** / **EtherCAT slave status** Off / INIT Flickering / BOOTSTRAP Blinking / PRE-OPERATIONAL Single Flash / SAFE-OPERATIONAL On / OPERATIONAL
LED5		ERROR LED	**Red**	**LED signal** / **EtherCAT slave status** Off / No error Blinking / Invalid configuration Single flash / Local error Double flash / Watchdog timeout

Identified	Group	Name	Color	Meaning
LED1 & LED6	Ethernet Link Status	LINK0 & LINK1	**Green**	

LED signal	Slave State
Off	Port closed
On-Off alternating	Port opened (activity on port)
On	Port opened (no activity on port)

8.2.1. Start-up Sequence

After power on the drive LEDs sequence is the next one:

EtherCAT 0 Link	EtherCAT 1 Link	Drive Status	Ether CAT Status
Standard behaviour (defined above)	Standard behaviour (defined above)	• Switch off if initialization is OK • RED if an error has been detected during initialization	• Switch off (the slave will stay in Init State after power-up until an EtherCAT master forces it to transition to another state)

8.3. CANopen protocol (EVE-XCR-C)

Identified	Group	Name	Color	Meaning
LED2	Driver Status	RESERVED	**Green**	Reserved.
LED3		FAULT	**Red**	LED is on when an err state the LED will rem
LED4	EtherCAT / CANopen Status One Bi-color LED provides information about the CANopen communication status, according to CiA 303-3 recommendations.	RUN LED	**Green**	RUN LED indicates th signalling. Next table **LED signal** Off Blinking Single flash On
LED5		ERROR LED	**Red**	ERROR LED indicates (sync, guard or heartb **LED signal** Off Single flash Double flash Triple flash On

Identified	Group	Name	Color	Meaning
LED6	Ethernet Link Status	LINK0	**Green**	LINK0 indicates the st connected. **LED signal** Off On-Off alternating On
LED1	Ethernet Link Status	LINK1	**Green**	LINK1 indicates the st connected. **LED signal** Off On-Off alternating On

8.3.1. Start-up Sequence

After power on the drive LEDs sequence is the next one:

Ethernet 0 Link	Ethernet 1 Link	Drive Status	CANopen Status
Standard behaviour (defined above)	Switched off (unused)	• Switch off if initialization is OK • RED if an error has been detected during initialization	1. Switch off during initialization 2. PRE-OPERATIONAL signalling when initialization is done

9. Wiring and Connections

9.1. Everest XCR Connection Diagram

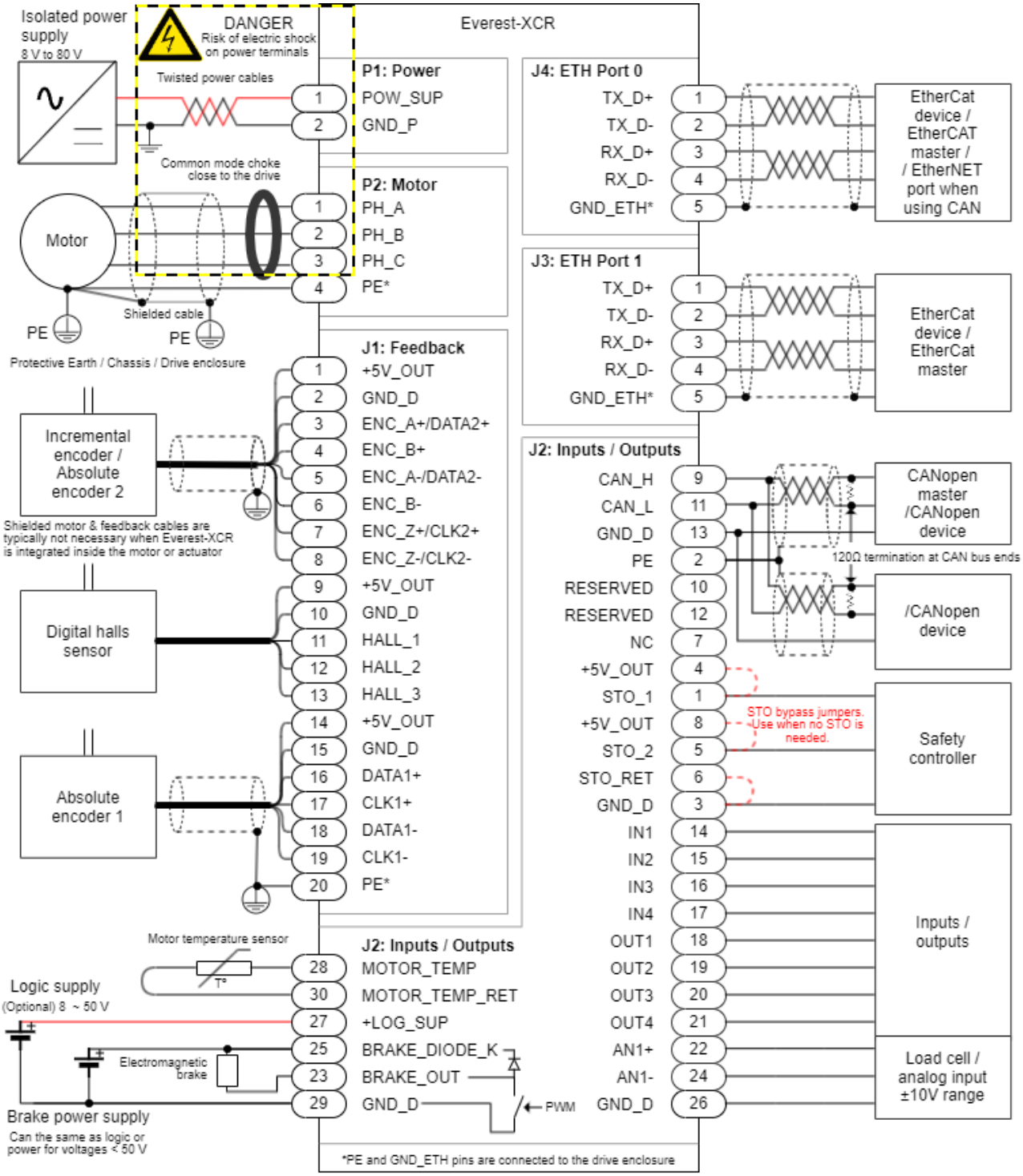

Detailed wiring diagram for each module:

- Protective Earth
- Power Supply and Motor Power
- Safe Torque Off (STO)
- Brake and Motor Temperature
- Feedbacks
- Inputs and Outputs
- Communications

9.2. Protective Earth

Connection of Everest XCR Servo Drive and motor housing to Protective Earth (PE) is required for safety and Electromagnetic Compatibility (EMC) reasons**.** Electrical faults can electrically charge the housing of the motor or cabinet, increasing the risk of electrical shocks. A proper connection to PE derives the charge to Earth, activating the installation safety systems (differential protections) and protecting the users. Please see this technical note to understand why this is important: Electromagnetic Interference Issues With Servo Drive Systems.

Reducing EMI susceptibility

Connecting the drive PE terminals and cold plate screws **to your system Earth and to the motor housing solves many noise and EMC problems.** The enclosure of the drive and PE terminals are decoupled to power ground (supply negative, GND_P) through two 1 nF capacitors. This creates a low impedance preferential path for coupled common-mode noises that otherwise would be coupled to sensitive electronics like the encoders.

Everest XCR Servo Drive provides the following Protective Earth connection points, which are internally connected and decoupled to power ground:

- PE terminal in the motor connector P2 pin 4.
- Driver housing
- Threaded M2.5 assembly holes
- Pin 20 of feedback connector J1
- Pin 2 of Inputs/outputs connector J2

The protective earthing conductor must have an area equal or superior to the power cables and always no less than 2.5 mm^2. Respect the green-yellow color code for PE. Connections must always be done using non-corrosive bonding points. A diagram of the recommended Protective Earth wiring is shown following.

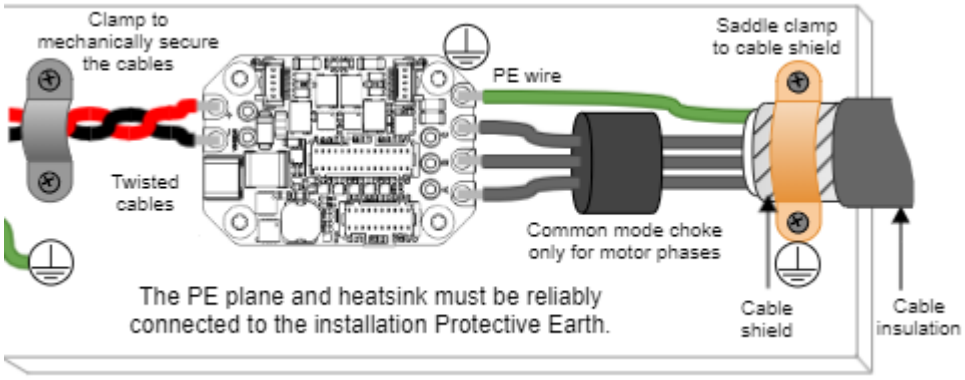

Earth plane reference

While some systems will not have a "real Earth" connection, use your **machine chassis**, the metallic structure of the device or a good grounding conductive plane as your reference earth.

Some considerations for a proper earth connection are detailed next:

- Connecting PE to GND_P near the power supply can provide an advantage for EMC and electrical safety by keeping a low voltage. Dis can only be done when the drive is powered with an isolated power supply or battery. This action, however sometimes can create unwanted effects such as added common mode noise or electrical safety issues depending on the whole installation layout.
- Switching noise by the phases is coupled to earth through the housing of the motor. This high-frequency noise creates a common mode current loop between drive and motor. Although the motor housing is connected to earth through the system chassis, its electrical connection may have a relatively high

impedance and present a big loop. For this reason, is essential to reduce the common-mode current return path impedance and its loop area.
    - To reduce the return path impedance the **motor frame should be directly wired** to drive PE terminals or enclosure.
    - PE wiring should be as close as possible to motor power cables.
- In order to avoid ground loops, it is a good practice to have a **central earth connection point (or bus)** for all the electronics of the same bench. If multiple drives are supplied from the same power supply or supply PE to drive PE connection is not practical (not enough connection terminals) connect all PE terminals in a central connection bus.
- Whenever possible, **mount the drive on a metallic conductive surface** connected to earth like the heatsink. Use good quality screws with spring washers that will not oxidize or lose conductivity during the expected lifetime.
- For achieving low impedance connections, use wires that are **short, thick, multi-strand**. PE wire section should be the same as power supply cables. Always **minimize PE connection length**.
- For best EMC performance Everest XCR should be mounted physically close to the actuator or inside the enclosure.

In case the Everest XCR is not integrated on the motor or actuator, use **shielded cables** with isolating jacket, connecting the shield to PE with a cable clamp to the PE plane. The priorities are:

1. Shield the motor cables, which are the main high-frequency noise source.
2. Shield the feedback signals, which are sensitive signals usually coming from the motor housing. Connect the shield to one end (drive) to avoid ground loops.
3. Shield I/O signals and communication cables.

The **clamp has to be selected according to the shielded cable diameter**, **ensuring good support and connection** between the cable shield and the clamp. The clamp also offers a mechanical securing of the soldered wires. Following examples are only suggested for a conceptual purpose:

Description	Part number
Cable Clamp, P-Type Silver Fastener 0.187" (4.75 mm)	Keystone Electronics 8100
Cable Clamp, Saddle Type Stainless Steel 20 mm	RS Pro 471-1300

9.3. Power Supply and Motor Power

9.3.1. Single Power Supply

The Everest XCR can be powered from a single power supply as shown in the following figure. Since the power cables are soldered to the board it is essential to provide mechanical fastening to avoid ripping them off.

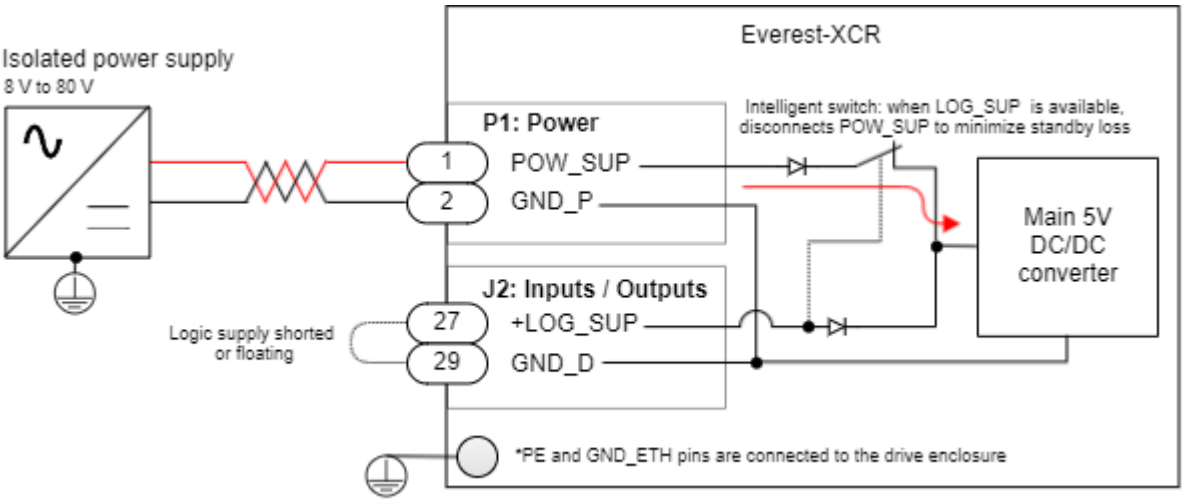

9.3.1.1 Power Supply Requirements

The choice of a power supply for Everest is mainly determined by the following criteria:

- The power supply **must be isolated** with a minimum Overvoltage Category of II (Typ ≥ 2500 V isolation). This does not apply if the Everest is battery-powered and isolated from the electrical grid.
- The **voltage** should be targeted for the motor and its speed requirements. See How to dimension a power supply for an Ingenia drive. Ensure it is always within the operating ranges of the Everest specifications. It is strongly recommended to leave a margin between the nominal voltage and the maximum absolute of the drive (80 V) to allow some regenerative braking. Working near the limits can cause faults. Note that for safety-critical applications a ≤50 V power supply has the advantage that all circuits can be considered Safe Extra Low Voltage (SELV) which simplifies installation protection against electric shock.
- The **current** should be the one able to provide the electrical **power** of the application. The conservative approach is to choose the power supply rated current as your maximum motor current. This conservative approach, however, can lead to oversized power supplies since the DC current is typically lower than the motor current. See Understanding why the motor phase current is different than the power supply current. The power supply current should be determined according to the maximum power point where the product speed · torque is maximum. See more details here How to dimension a power supply for an Ingenia drive. Also, consider the simultaneity factor when having various drives in parallel.
- Servo drive systems tend to have large current peaks and regenerate. This can cause overvoltage faults, under-voltage, or even unstabilize the control loop of the power supply. It is preferred to choose robust power supplies with current limiting behavior, overvoltage margin from the nominal, and non-latching fault to prevent shut-down in case of a transient regeneration or overload.

The transformer and rectifier type supplies are simple and reliable. Switch Mode Power Supplies (SMPS) provide good efficiency, low harmonic distortion. Always choose good quality, EMC compliant power supplies.

To determine if the system may have regenerative braking issues check: Dimensioning a Shunt Resistor for Regenerative Braking. See shunt wiring next.

9.3.2. Dual Power Supply

For systems where it is necessary to keep communications alive, or keeping position information with incremental sensors while power is off, the drive can be powered from a logic supply input on the I/O connector. Choose the main power supply as indicated above. There are no special power supply sequencing requirements.

💡 Powering the logic supply at a lower voltage than the power will reduce the standby loss by increasing the efficiency of the main DC/DC converter.

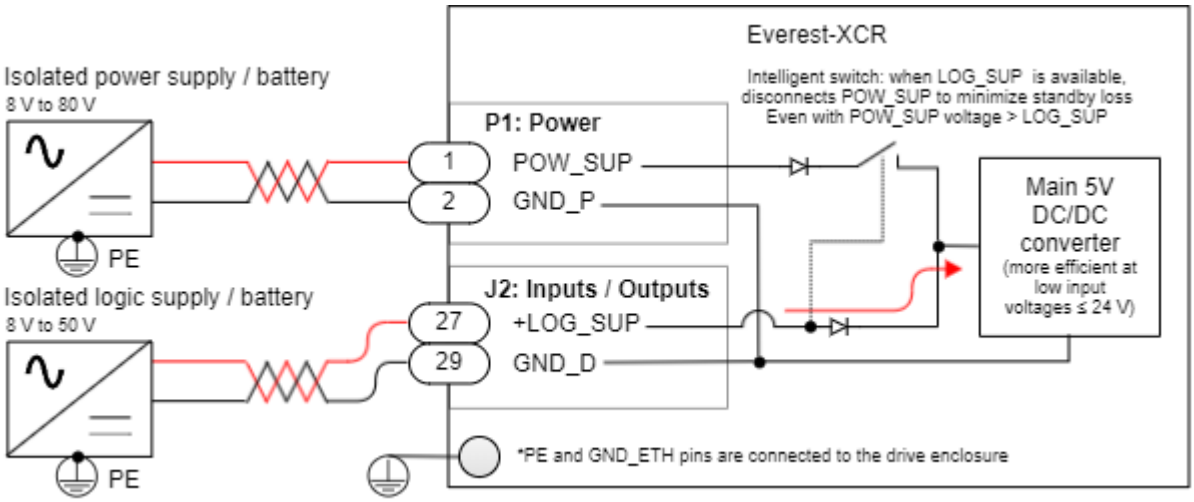

Note GND_P and GND_D are internally connected in the drive. It is not needed or recommended to duplicate this connection externally.

9.3.2.1 Logic Supply Requirements

The logic supply should meet the following criteria:

- The logic supply **must be isolated** with a minimum Overvoltage Category of II (Typ ≥ 2500 V isolation) or battery powered.
- The recommended **voltage** is range is 8 V to 26.4 V (SELV/PELV). The maximum voltage is 50 V. Lower voltages reduce standby losses by making the DC/DC converter on a low loss point.
- The **power** of the logic should be at least **5 W**.

9.3.3. Power Supply EMI Filter

In applications that require mitigating conducted and radiated electromagnetic emissions an input EMI filter is necessary. Depending on the application, motor construction, PWM frequency and specific EMC requirements the filter should be chosen. It is possible to share a single EMI filter for various servo drives given that the power ratings are observed.

The connections are shown next, a good PE plane is strongly recommended. Please follow grounding recommendations. Note that the Everest XCR includes 2 x 1 nF 2 kV capacitors between GND_P and PE (the drive aluminum enclosure).

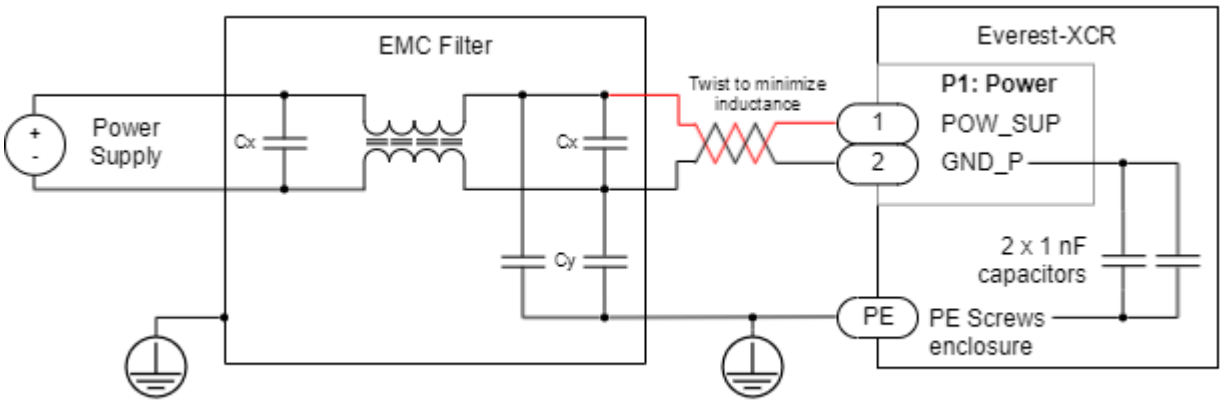

For the lowest EMC, it is recommended to use a 2 stage filter like TE Connectivity 30EMC6.

9.3.4. Shunt Braking Resistor Connection

A shunt braking resistor can be activated from Everest XCR by using an external transistor. Any of the 4 general-purpose outputs can be configured to turn-on when the dc bus exceeds a certain threshold: Shunt braking resistor.

The digital outputs provide a 0 ~ 5 V output with a 470 Ω in series resistance inside the drive. This will typically be enough to turn on - off a power MOSFET transistor that can withstand at least 30 A braking current, like IRLR3110ZTRPBF. Ensure that a transient voltage Zener like MM3Z6V2T1G is placed in parallel with the gate of the transistor and a pull-down 10 kΩ resistor ensures a safe off state of the transistor in case of disconnection. If the shunt braking resistor or circuit is inductive a re-circulation diode like V8P10-M3/86A is needed.

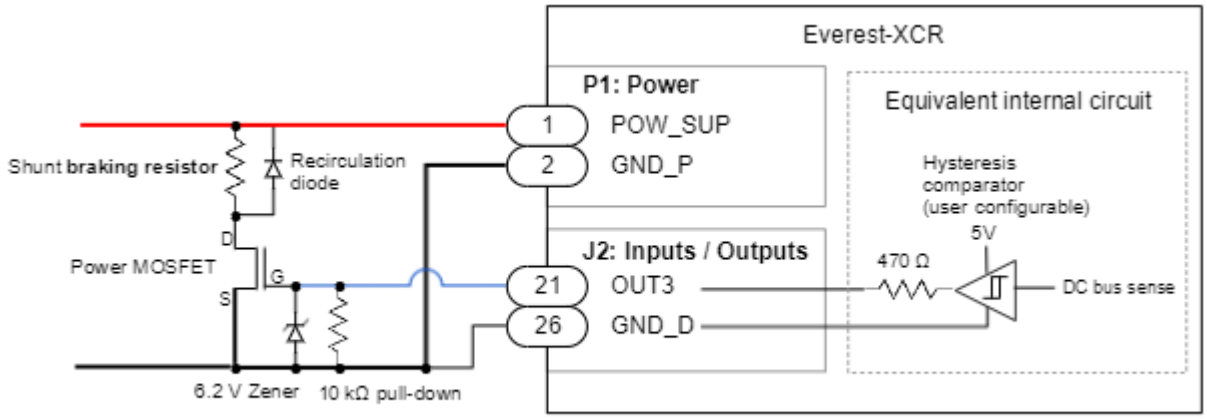

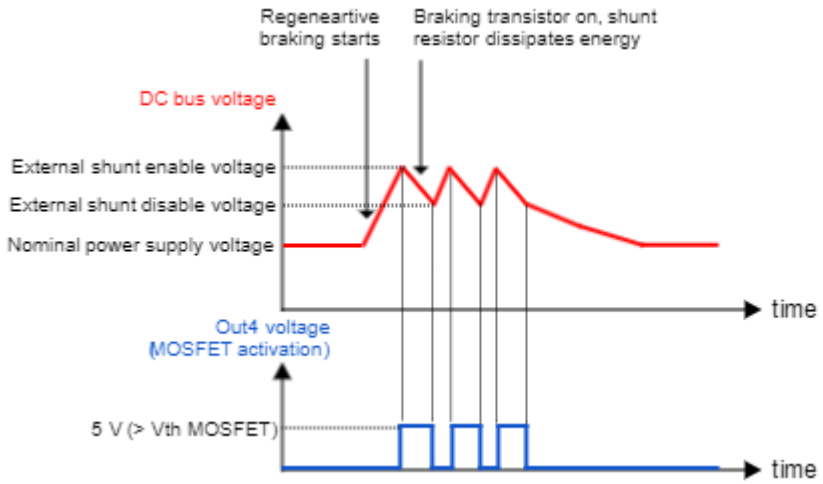

Shunt resistor calculation tool

Additional information on shunt braking resistor sizing and a calculation tool can be found here**.**

9.3.5. Motor Connections

9.3.5.1 3 Phase Brushless

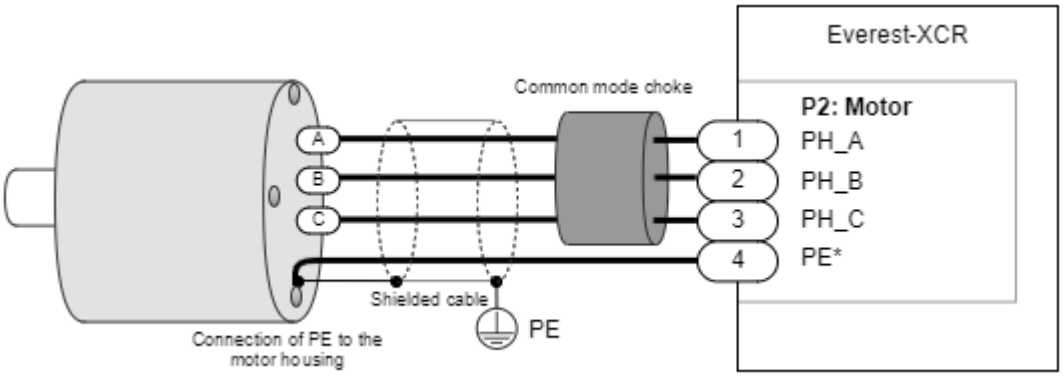

9.3.5.2 DC Motor

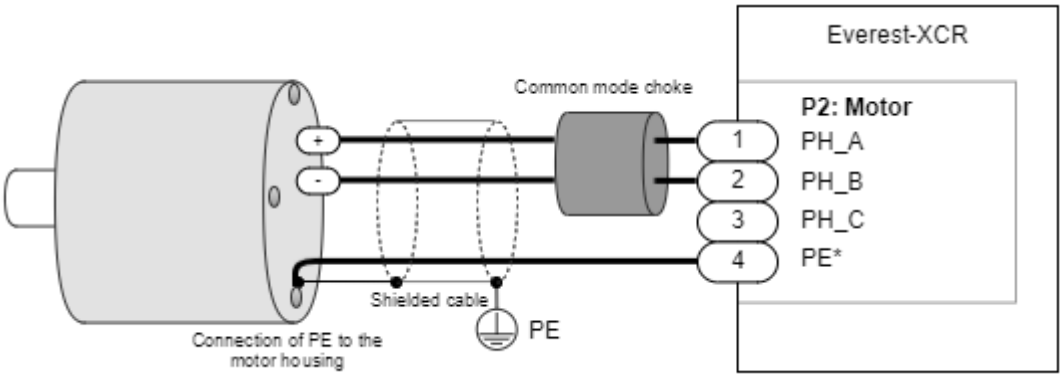

9.3.5.3 Motor Choke

In applications where electromagnetic compatibility is needed, the use of an external common mode choke is necessary for the motor phases. Please see this document to understand why this is relevant Electromagnetic Interference Issues With Servo Drive Systems.

Note that on applications where the drive is mounted inside the motor or actuator the choke and cable shields may be removed. While the actuator enclosure will provide shielding against radiated EMC, the need or not of common mode choke will depend on motor construction, especially capacitive coupling between windings and housing as well as EMC requirements.

Some choke wiring recommendations are:

- Place the choke as **close to the drive** as possible. The objective is to cancel the noise close to its source (the switching power stage).
- Make sure the chosen choke **does not saturate at the maximum operating phase current**. If this happens, the choke temperature would increase rapidly.
- Make only 1 or 2 turns of the motor cables. More than 2 reduces its effectiveness as the capacitive coupling between wires bypasses the choke effect.
- **PE conductor should never** pass through the choke.
- Avoid contact of the toroid core with a grounding point.

The next table shows recommended chokes for the Everest XCR.

Type	Manufacturer	Part number	Remarks
Wide frequency oval ferrite cable core	Laird Technology	28B0773-050	Single turn. Preferred option.
Wide frequency cylindrical ferrite cable core	Laird Technology	28B0999-000	Double turn option. Higher attenuation.

In case of doing 2 turns, space the phases 120° apart. Start each phase wire in the same rotating direction, wrapping all phases clockwise or anticlockwise. This will add the common-mode flux and increase its impedance.

9.3.6. Power Wiring Recommendations

9.3.6.1 Cable Selection

Power cables for the Everest XCR must be designed according to the averaged RMS current of the application. Please follow the next recommendations:

- The cable insulator must tolerate ≥ 180 ºC. Silicone or Teflon insulation are suggested. PVC or thermoplastic cables are not recommended due to their low operating temperature.
- Use flexible cables to prevent mechanical stress to the solder joints.
- For an easy and comfortable integration, the diameter of the conductor should not exceed 2.4 mm, the solder pad has a 2.6 mm in diameter.

The following are recommended wire gauges. The minimum gauge is based on a self-heating to 180 ºC of a Silicone or Teflon cable. Note that this may not be acceptable in applications that cannot tolerate this cable temperature.

Operating RMS current	Conductor diameter (mm)	Minimum Cross-Sectional Area (CSA mm²)	Minimum wire gauge	Conductor diameter (mm)	Recommended Cross-Sectional Area (CSA mm²)	Recommended wire gauge
45 A_{RMS}	2.6 mm	5.3 mm²	10 AWG	3.3 mm	8.4 mm²	8 AWG
30 A_{RMS}	1.3 mm	1.3 mm²	16 AWG	2.1 mm	3.3 mm²	12 AWG
18 A_{RMS}	1.0 mm	0.8 mm²	18 AWG	1.3 mm	1.3 mm²	16 AWG
12 A_{RMS}	0.8 mm	0.5 mm²	20 AWG	1.0 mm	0.8 mm²	18 AWG

Protective earth wire must always have an area equal or superior to the power cables and always no less than 2.5 mm² (13 AWG).

For best electromagnetic compatibility (EMC) the power supply cable inductance should be minimized. Wiring recommendations:

- Minimize the area between positive and negative supply voltages. The best practice is by **twisting** them as can be seen in the wiring diagrams.
- Increase cross-section of the cables (Max recommended is 8.4 mm² CSA, 3.3 mm diameter).
- Reduce the distance between the power supply and drive.

Using 10 AWG ~ 8 AWG wires recommendations

To reach maximum current capability, 10 - 8 AWG wires must be used. In that case, the conductor diameter will be wider than the solder pad. 2 soldering options are recommended for best thermal and mechanical performance:

Option 1: Vertical entry

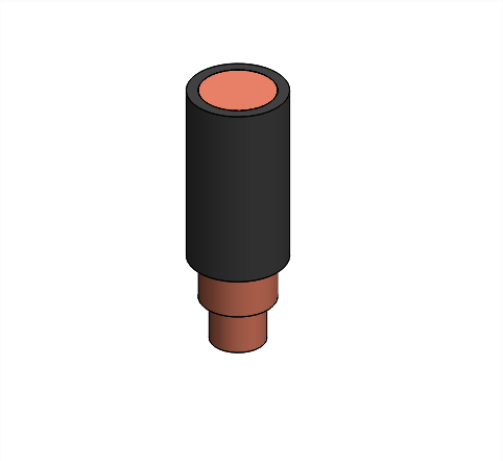

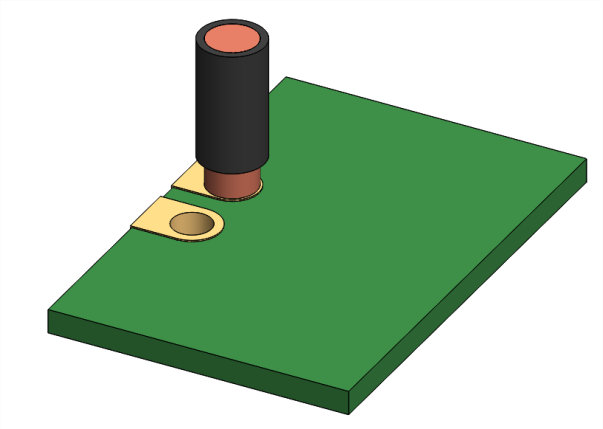

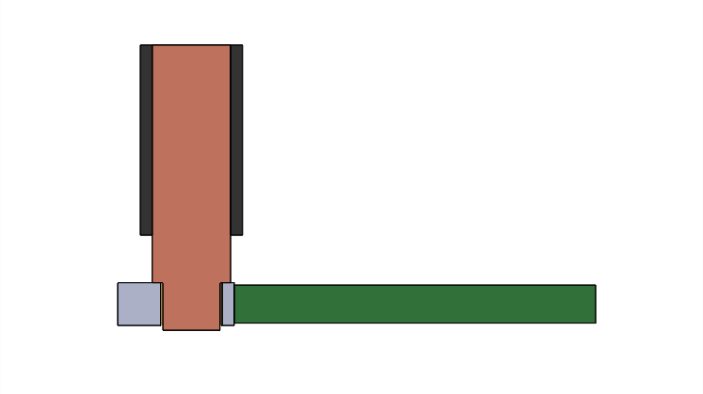

Option 2: Lateral entry

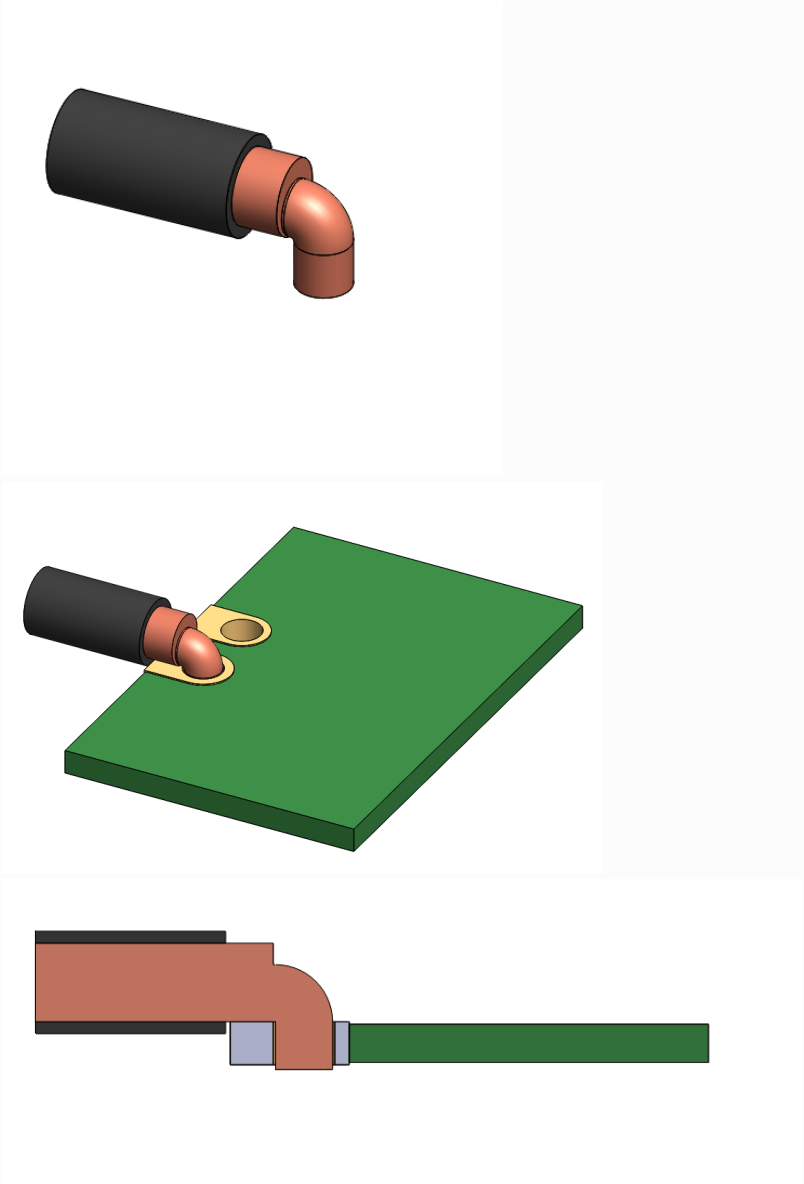

9.3.6.2 Soldering Power Pins

The power wires of the Everest-XCR should be soldered appropriately to ensure a reliable and low resistance connection. The solder holes are 2.6 mm in diameter. ensure the cable diameter does not exceed this. Always use RoHS compliant solder tin.

Please follow these steps:

1. Cut and peel the power cables in advance with the appropriate length. The peeled length can be around 3 mm. Do not cut them after soldering as it will cause permanent tensions.
2. Pre-tin the stranded wires by applying the solder with flux to the wire using a heated soldering iron tip. This can be done with a solder bath method. Ensure a minimum solder time of 2 ~ 3 seconds.
    a. Solder shall penetrate the inner strands of stranded wire.

   b. Solder shall not obscure the wire contour at the termination end of the insulation.
   c. Anti-wicking tools are strongly recommended in order to protect the cable insulation.
3. Apply flux to the pads with a brush to ensure surfaces are clean and there is sufficient flux.
4. Pre-tin the solder pads of the Everest-XCR using Rohs-free solder. Take precautions with the solder balls not to create any short. Do not fill the hole.
5. Position the wire inside the hole with the desired cable exit direction and solder them with a clean solder tip. Additional solder may be needed.
6. Clean the flux residues with appropriate solvents like isopropyl alcohol (IPA).
7. Do not cut the wires after soldering as it may cause permanent stress and long term reliability issues.

Further tips on best practices can be found in ESA standard ECSS-Q-ST-70-08C.

Danger!

Power and motor pins have live voltages in excess of 50 V which can cause electric shock! It is essential to perform connection or commissioning procedures without power.

Les broches de l'alimentation et du moteur ont une tension supérieure à 50 V qui peut provoquer un choc électrique ! Il est essentiel d'effectuer les procédures de connexion ou de mise en service sans alimentation électrique.

Motor and power cables must always be mechanically secured

To prevent damage to the solder joint and ensure a long-term reliable connection it is mandatory to **mechanically secure the cables after soldering**.

If you use shielded cables, the EMC clamp can provide this mechanical support.

Mechanical clamps must not have sharp edges that could damage the conductor jacket.

9.4. Safe Torque Off (STO)

The STO is a safety system that prevents motor torque in an emergency event while Everest XCR remains connected to the power supply. When STO is activated, the power stage is disabled by hardware and the drive power transistors are disconnected, no matter what control or firmware does. The motor shaft will slow down until it stops under inertia and frictional forces. Although not common, in the event of a failure of the power stage during an STO situation, the maximum expected motor movement with torque can be up to 180º electrical degrees. The system must be designed to avoid any hazard in this situation.

If the STO inputs are not energized or the wires are not connected, the transistors of the power stage are turned off and an STO fault is notified. In order to activate the power stage, and therefore allow the motor operation, the two STO inputs must be energized (high level, typically 5V to 24V). STO inputs should not be confused with a digital input configured as enable input, because enable input is firmware controlled and does not guarantee intrinsic safety as it can be reconfigured by a user.

In order to ensure redundancy and safety, the Everest XCR includes 2 separate STO inputs that must be activated or deactivated simultaneously (maximum 1.4 s mismatch). A difference of state between STO1 and STO2 inputs will be interpreted as an abnormal situation after 1.4 s the drive will be latched in a fault state. **A power supply reset is necessary to remove this STO abnormal error.**

9.4.1. Safety Function Specifications

Safety Function Specification	**Value**	
Standards compliance	• IEC 61800-5-2:2016 • IEC 61508:2010 • EN ISO 13849-1:2015	
Safety function	Safe Torque Off (STO)	
Safety relevant parameters according to IEC 61508:2010	Safety integrity level	SIL3
	PFH	1.31 x 10^{-9} 1/h
	SFF	> 99 % (High)
Safety relevant parameters according to EN ISO 13849-1:2015	PL	e
	Category	3
	DC	99% High
	MTTFd	≥ 100 years (High)
Safety Function Reaction Time	t < 6.3 ms The Safety Function Reaction time is measured as the time since one of the STO inputs (STO1 or STO2) goes below 1.1 V and the STO function actuates (power transistors deactivated).	
Fault Reaction Time	t< 33 ms The worst-case fault reaction time is on the event of a 5V DC/DC supply overvoltage.	

Safety Function Specification	Value
High-demand mode	The EUC (Equipment Under Control) is considered as a high-demand or continuous demand mode system.
Mission Time	The mission time of the EUC is of 20 years.
Diagnostic Time Interval	In order to guarantee the correct operation of the safety functions, the user has to check the STO function regularly, performing an STO External Diagnostic Test (see further information below). The diagnostic test interval is defined as a minimum of 1 activation per 3 months.

9.4.2. Integration Requirements

Integration Requirement	Value	
STO Interface electrical characteristics	Input pins	STO1, STO2 and STO_RET
	Number of independent channels	2
	Type of Inputs	Isolated inputs (STO1, STO2) with common reference (STO_RET). ESD protected with input current limit to reduce power. See schematics next.
	Maximum input LOW level (VIL)	1.1 V or open (below this value the STO is ACTIVE, no torque can be applied to the motor)
	Minimum Input HIGH level (VIH)	3.6 V (above this value the STO input is inactive, torque can be applied to the motor)
	Maximum absolute ratings	24 V SELV (maximum OVP 26.4V (110%); maximum failure voltage 60 V)
	Input current	5 mA typ / 10 mA max
	Isolation Level	> 4 GΩ, 500 V_{rms}, 1000 V_{DC}
	ESD capability	IEC 61000-4-2 (ESD) ± 15 kV (air), ± 8 kV (contact), IEC 61000-4-4 (EFT) 40 A (5/50 ns), IEC 61000-4-5 (Surge) IPPM > 8 A
STO Interface timing characteristics	STO activation time (Safety function Reaction Time)	t < 6.3 ms
	STO deactivation time	t < 2ms

	Minimum, non-detected STO short pulse	t < 400 µs The Safety controller can transmit short pulses to STOx inputs for diagnostics purposes. These pulses will be ignored by the safety circuit and will not stop the power stage but can be read from firmware for system diagnostics, see: Drive protections Register 0x51A.
	Abnormal STO diagnostic time	≤ 6.3 ms (Activation STO)
	Abnormal STO latching time	1.4 s ~ 3.4 s (Latching state, permanent activation of STO until power reset)
	Power supply diagnostic time	5 V over-voltage 33 ms, 5 V under-voltage 33 ms 3.3 V over-voltage 200 ns, 3.3 V under-voltage 8 ms
Logic Supply Voltage Range [1]	**Logic supply must be provided to the system** 24 V SELV (range from 8V to 26.4V; maximum failure voltage 60 V)	
Power Supply Voltage Range [1]	48 V SELV (range from 8V to 60V; maximum failure voltage 60 V)	
Motor Type	STO safety function is only considered when the drive is controlling **three-phase permanent magnet synchronous rotating motors.** STO does not apply to DC brush motors.	
Uncontrolled Motor Movement	**Uncontrolled Motor Movement** In the event of a failure in the power stage, **the motor shaft may rotate up to 180° electrical degrees.** It is responsibility of the customer to prevent any hazards related ot this unexpected motor movement.	
Environmental Conditions for STO	Pollution degree	Pollution degree 2 with an IP54 enclosure installation.
	Over-voltage category	II
	Altitude	< 2000 m above sea level.
Temperature range for STO [2]	Operating Temperature	-20°C to 50 °C
	Storage Temperature	-40°C to 100°C

Diagnostics	Internal power supply voltage monitors. Differences between STO1 and STO2 cause abnormal fault. After 1.4 s a hardware latching condition disables the drive until power cycling. Status of STO1, STO2, STO_REPORT, ABNORMAL_FAULT, and SUPPLY_FAULT can be read from the communications. **STO firmware notification** A STO stop is notified to the motion controller and creates a fault that can be read externally from any communication interface, however, STO operation is totally independent and decoupled from control or firmware.
EMC	To fulfill the EMC requirements it is necessary the use of the following elements is required: ▪ Input EMI filter. Recommended: TE Connectivity 30EMC6 or equivalent. ▪ Motor phases ferrite cable core. Recommended : 28B0773-050 or equivalent. ▪ Properly grounded aluminium enclosure. See grounding recommendations for further information.

1: Although the drive can operate in a wider range of voltages as can be seen in Product Description, the system cannot be considered safe outside this range.

2: The drive can operate outside this temperature range as indicated in the Product Description, however, the system cannot be considered safe as the system reliability and safety margins would not meet the standards.

9.4.3. STO External Diagnostic Test

The operation of the STO diagnostic circuits must be verified at least once per 3 months. The following procedure details a method to **verify the STO diagnostic circuits and the external wiring**. **If the procedure results are not the expected ones, safety could be violated and the system cannot be used.** Note that it is responsibility of the customer to prevent any hazards related to motor movement during this proof test.

The procedure requires the Everest XCR to be connected to a brushless motor.

Procedure Step	Action	Expected Result
1	Power on the Everest XCR with STO1 = low, STO2 = low.	-
2	Try to perform a "Motor Enable" (using Motionlab 3 or network commands).	Power stage is not enabled. Check it by software (a fault should appear) or by hardware (checking the Motor phases voltage with a multimeter). **CAUTION**: If power stage can be enabled, a problem on the diagnostics system or in teh wiring could exist.
3	Provide STO1 = high, STO2 = low. Remain in this state more than 3.4 seconds.	-

Procedure Step	Action	Expected Result
4	Try to perform a "Motor Enable" (using Motionlab 3 or network commands).	Power stage is not enabled. Check it by software (a fault should appear) or by hardware (checking the Motor phases voltage with a multimeter). **CAUTION**: If power stage can be enabled, a problem on the diagnostics system or in teh wiring could exist.
5	Provide STO1 = high, STO2 = high.	-
6	Try to perform a "Motor Enable" (using Motionlab 3 or network commands).	Power stage is not enabled. Check it by software (a fault should appear) or by hardware (checking the Motor phases voltage with a multimeter). **CAUTION**: If power stage can be enabled, a problem on the diagnostics system or in teh wiring could exist.
7	Shut-down Everest XCR supply and remain in this state for more than 10 seconds.	-
8	Power on the Everest XCR with STO1= low, STO2 = high. Remain in this state more than 3.4 seconds.	-
9	Try to perform a "Motor Enable" (using Motionlab 3 or network commands).	Power stage is not enabled. Check it by software (a fault should appear) or by hardware (checking the Motor phases voltage with a multimeter). **CAUTION**: If power stage can be enabled, a problem on the diagnostics system or in teh wiring could exist.
10	Provide STO1 = high, STO2 = high.	-
11	Try to perform a "Motor Enable" (using Motionlab 3 or network commands).	Power stage is not enabled. Check it by software (a fault should appear) or by hardware (checking the Motor phases voltage with a multimeter). **CAUTION**: If power stage can be enabled, a problem on the diagnostics system or in teh wiring could exist.
12	Shut-down Everest XCR supply and remain in this state for more than 10 seconds.	-

Procedure Step	Action	Expected Result
13	Power on the Everest XCR with STO1= high, STO2 = high.	-
14	Try to perform a "Motor Enable" (using Motionlab 3 or network commands).	Power stage can be enabled, allowing motor rotation. Check it by software (system should enter in motor enable state) or by hardware (checking the Motor phases voltage with a multimeter). If power stage cannot be enabled it could be caused by other faults not related with STO (over-voltage, under-voltage, etc.)

9.4.4. STO Operation States

The truth table of the STO inputs is shown next indicating the different states of the system:

Mode	State	STO1 status / level		STO2 status / level		Power stage status	STO report bit status	STO abnormal fault	State description
Normal operation	**STO Enabled** (No torque to the motor)	0	< 1.1 V	0	< 1.1 V	OFF	0	0	The system logic is powered, but the STO function is activated. Therefore, no torque can be applied to the motor. STO trip is reported to the MCU and to the safety circuitry. This is intended safe torque off with dual-channel operation.
	Torque enabled (STO inactive)	1	> 3.6 V	1	> 3.6 V	Can be enabled	1	0	The STO function is deactivated, and torque can be provided to the motor. The motor can run under firmware control. This is the normal operation state.

Mode	State	STO1 status / level		STO2 status / level		Power stage status	STO report bit status	STO abnormal fault	State description
Abnormal operation	**Abnormal STO**	0	< 1.1 V	1	> 3.6 V	OFF	0	1	If any issue is detected on the dual-channel STO function (their state is different for a long period of time), an abnormal fault is active can be reported. This state avoids the application of torque to the motor. If this persists for > 1.4 s ~ 3.4 s the STO will lock in FAULT state. To reset this fault a power cycle is needed.
		1	> 3.6 V	0	< 1.1 V	OFF	0	1	
	Abnormal STO Latched	x	-	x	-	OFF	NOR (STO1, STO2)	1	After >1.4 s ~ 3.4 s of abnormal STO active, the driver will stay in this state until the power supply cycle.
	Abnormal Supply	x	x	x	x	OFF	x	x	If a voltage out of the limits is detected on the internal logic voltages, the system is conducted to a safe state, similar to power-off. Only if the safe logic voltages are recovered (usually after reparation or restart), the system can return to any other state.

9.4.5. Interface and Connections

The wiring of the recommended STO circuit is shown next.

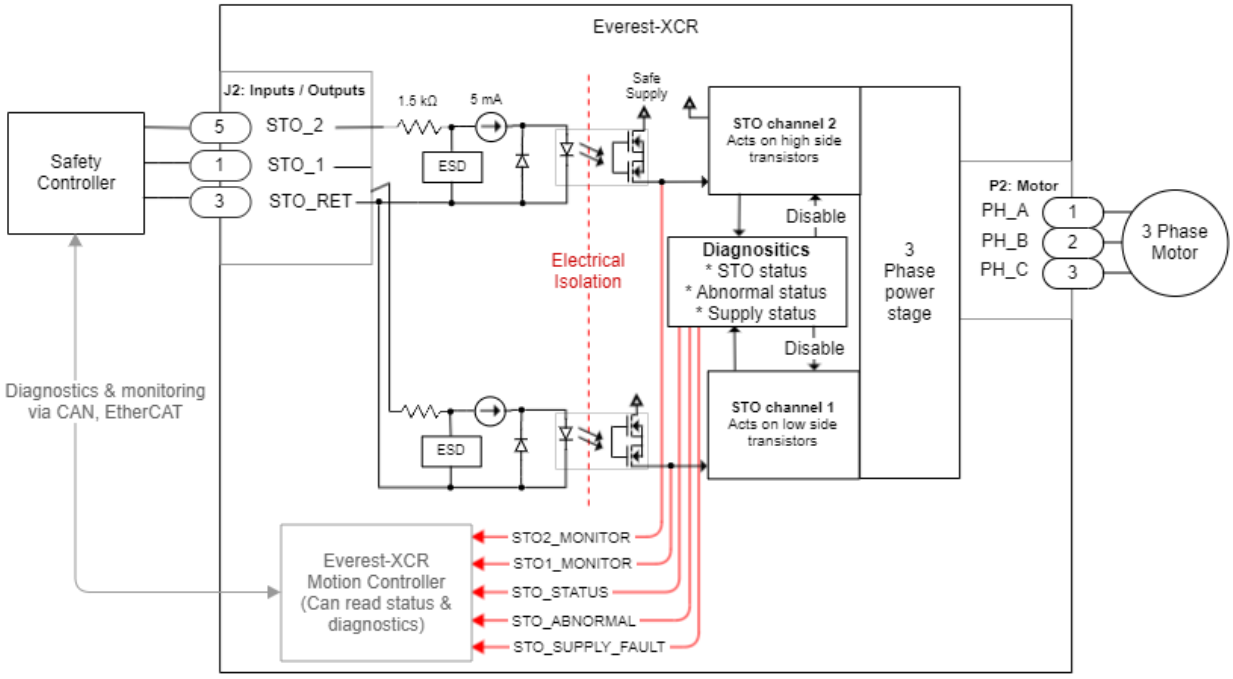

STO1 and STO2 signals should always change at the same time with a maximum of 1.4 s mismatch. This is necessary to have 2 channel redundancy and allow diagnostics, as a mismatch will cause an abnormal fault.

In order to ensure this, do **not** add big capacitors (> 100 µF) in parallel to the STO inputs as this may cause faults during activation or deactivation of the STO.

Les signaux STO1 et STO2 doivent toujours changer en même temps avec un décalage maximum de 1,4 s. Ceci est nécessaire pour avoir une redondance à 2 canaux et permettre le diagnostic, car une discordance provoquera une anomalie de fonctionnement.

*Afin de garantir cela, **n'ajoutez pas** de gros condensateurs (> 100 µF) en parallèle aux entrées STO, car cela pourrait provoquer des défauts lors de l'activation ou de la désactivation du STO.*

Wiring for a solution with panic button / emergency stop. When using this circuit ensure the difference between STO_1 and STO_2 signals changing the state is less than 1.4 s to prevent an abnormal situation. When using various protective switches connect them in series.

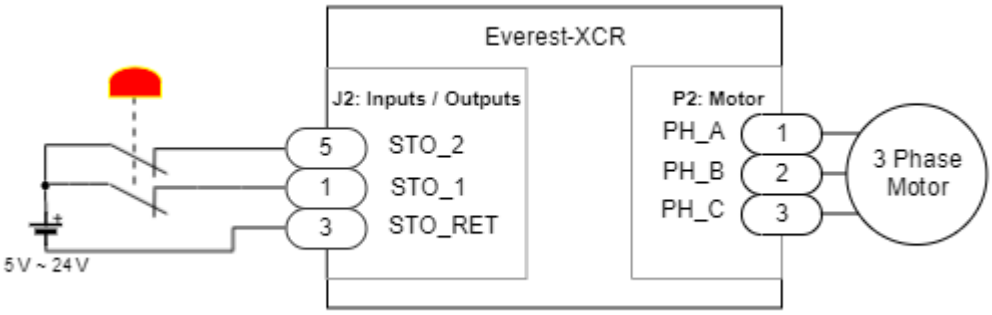

Wiring for a simplified version using the Everest-XCR +5V_out supply is shown next (no need for 24 V supply). Note that as the 5V_OUT is connected to other circuits like feedbacks and isolation on STO inputs is lost. The example

emphasizes the recommended connection when using various safety elements. Redundant wiring will improve reliability.

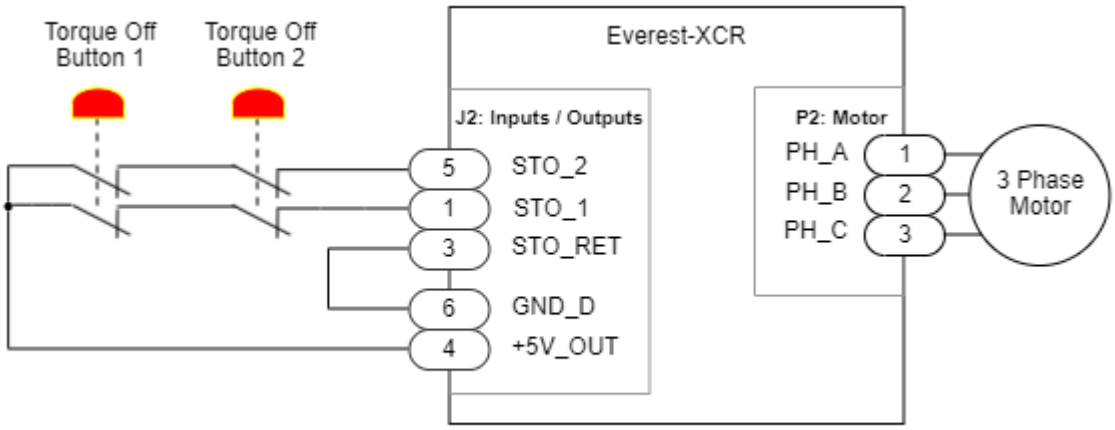

9.4.6. STO bypass (needed when no STO functionality is implemented)

If STO is not be used, it must be overridden with 3 wire jumpers on the I/O connector, otherwise, it will not be possible to enable the drive. See the following figure:

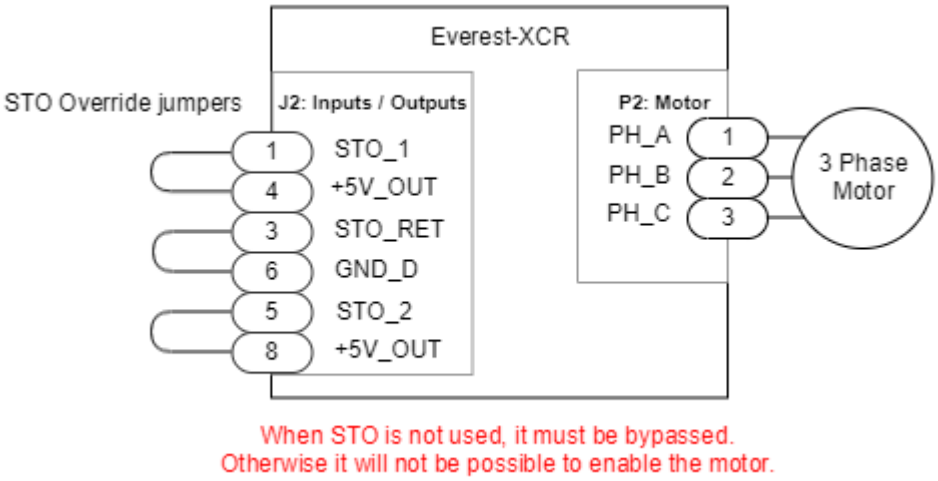

For applications that do not require STO, this bypass **is mandatory**. Otherwise the drive will not function.

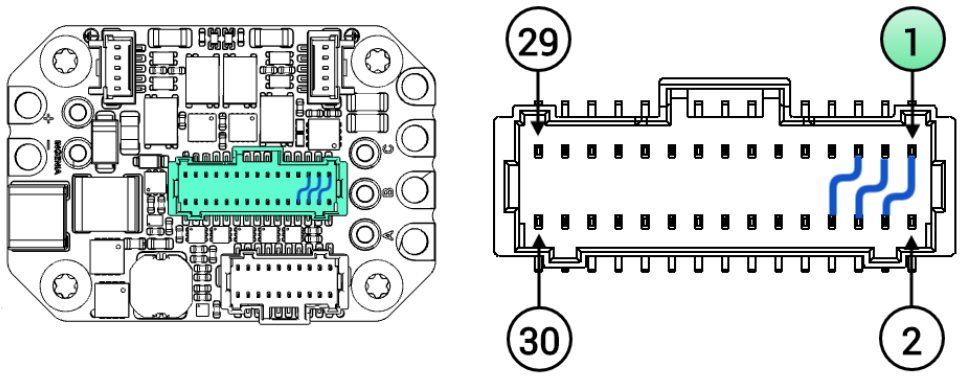

9.5. Brake and Motor Temperature

9.5.1. Motor electromagnetic / electromechanical brake

Electromechanical brakes are needed in critical applications where the disconnection of the motor or a lack of electric braking could be dangerous or harmful (i.e. falling suspended loads). Everest XCR Servo Drive includes a brake output on the I/O connector J2. The brake output is an N-Channel MOSFET that can be PWM modulated to reduce effective brake voltage and thus power consumption when energized**.**

Its operation is usually configured for normally locked electromechanical brakes; that is, brakes that by default block the movement of the motor shaft when not powered. This kind of brakes increases the safety of the application because, in a drive power failure, the switch would be opened therefore the brake activated. Main ratings of the brake switch are detailed in the next table:

Specification	**Value**
Type of output	N-Channel MOSFET, open-drain with a recirculation diode
Maximum voltage	50 V (connector limited)
Maximum current	1A (full temperature range)
Delay after enabling the brake	0 ~ 10000 ms (user configurable)
Delay before release brake	0 ~ 10000 ms (user configurable)
Brake PWM frequency	4 kHz ~ 40 kHz

The next figure shows how the typical connection of the brake using a dedicated power supply.

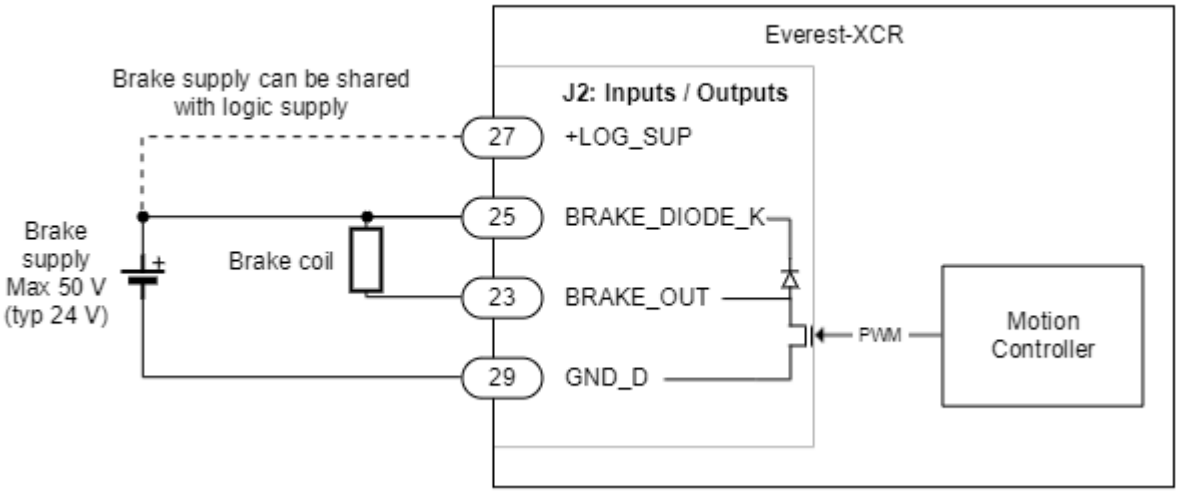

The next figure shows the connection with a single power supply (< 50V systems). Note that it is possible to operate a 24 V brake with a 48 V power supply by configuring the maximum PWM duty cycle of the brake to 50%. In this case, configure it carefully before physically connecting the brake.

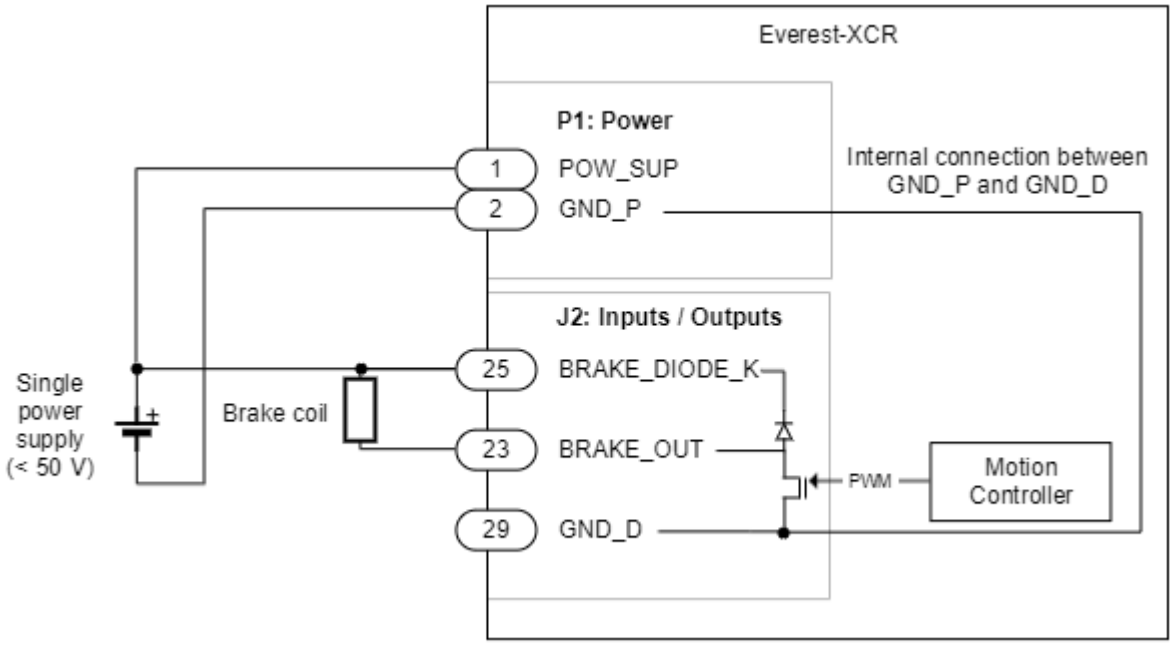

9.5.2. External temperature sensor

The Everest XCR motor safety system connector allows the connection of an external temperature sensor based on changes of resistance (PTC thermistor, bimetal, NTC, PT100, silicon temperature sensors) to measure the motor temperature. The motion controller includes linearization for various sensors so the motor temperature can be read directly. Connection of the 2 wire sensors is shown next:

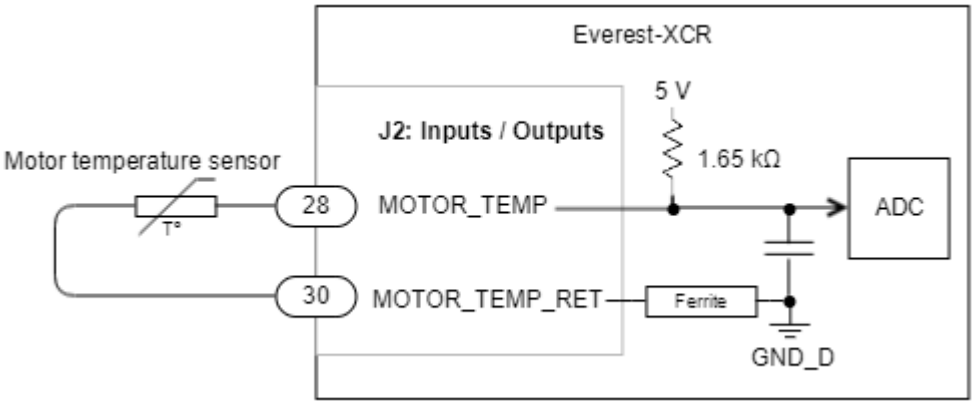

WARNING, the motor can be hot.

The motor may become very hot > 70 ºC during operation. Do not touch it directly to prevent burns! The use of the temperature sensor is strongly recommended.

ATTENTION, le moteur peut être chaud.

Le moteur peut devenir très chaud > 70 ºC pendant le fonctionnement. Ne le touchez pas directement pour éviter les brûlures ! L'utilisation de la sonde de température est fortement recommandée.

	CAUTION, motor overload. The Everest XCR may allow currents that can damage or cause a fire to the motor. Always ensure that the continuous and peak current ratings of the motor are respected by adjusting during the drive configuration. ***ATTENTION, surcharge du moteur.*** *L'Everest XCR peut laisser passer des courants qui peuvent endommager ou provoquer un incendie du moteur. Veillez toujours à ce que les courants nominaux continus et de pointe du moteur soient respectés en effectuant des réglages lors de la configuration du variateur.*

9.6. Feedbacks

The Everest XCR can be connected to a maximum of 3 feedback devices at the same time that might be used for commutation and/or velocity/position control purposes. These devices are connected in the J1 connector of the board in with the following pin definitions:

Feedback port	J1 connector pins	Allowed feedbacks
Digital Halls	9 to 13	Digital Halls, open collector or push-pull.
Absolute encoder 1	14 to 19	SSI absolute encoder, Single BISS-C, Dual BiSS-C in daisy chain topology (up to 2)
Incremental encoder / Absolute encoder 2	1 to 8	Quadrature incremental encoder (S0S90), SSI absolute encoder.

Powering the feedbacks

A 5 V 200 mA overcurrent-protected output is provided to power external circuits, including feedback sensors.

If it is not used, and the sensor is powered externally, **always remember to connect the ground or reference voltage to the Everest XCR**.

Une sortie protégée contre les surintensités de 5 V 200 mA est fournie pour alimenter les circuits externes, y compris les capteurs de retour.

Si elle n'est pas utilisée et que le capteur est alimenté en externe, ***n'oubliez pas de connecter la terre ou la tension de référence à l'Everest XCR****.*

9.6.1. Digital Halls

The Hall sensors are Hall effect devices that are built into the motor to detect the position of the rotor magnetic field. Usually, motors include 3 Hall sensors, spaced 120º (electrical degrees) apart that are in phase with the stator position. Using these 3 signals, the drive is capable to detect the position, direction, and velocity of the rotor. The Halls effect sensors are a good way to detect the phasing of the motor and avoid "wake and shake" movements. Everest XCR can use digital Hall sensors alone to drive the motor with trapezoidal commutation, but not with sinusoidal commutation due to the improper total resolution that the hall effect sensors have in comparison with other devices such as an incremental encoder.

This interface accepts 0 ~ 5 V level signals. Inputs are pulled up to 5 V with 1 kΩ, so industry-standard open collector and push-pull output Hall effect sensors can be connected. Next table summarizes digital Halls inputs main features:

Specification	Value
Type of inputs	Single ended with pull-up and low pass filter ESD rugged
Number of inputs	3

Specification	Value
ESD capability	IEC 61000-4-2 (ESD) ± 30 kV (air), ± 30 kV (contact) IEC 61000-4-5; tp = 8/20 µs 12 A, 200 W
Maximum voltage range	-0.5 ~ 5.5 V
Maximum recommended working frequency	5 kHz
1st order filter cutting frequency (-3dB)	16 kHz
Sampling frequency	10 ksps
Type of sensors	Open collector Logic output Push-pull output
Pull-up resistor value	1 kΩ

Next figures show the typical waveforms of the digital Halls signals.

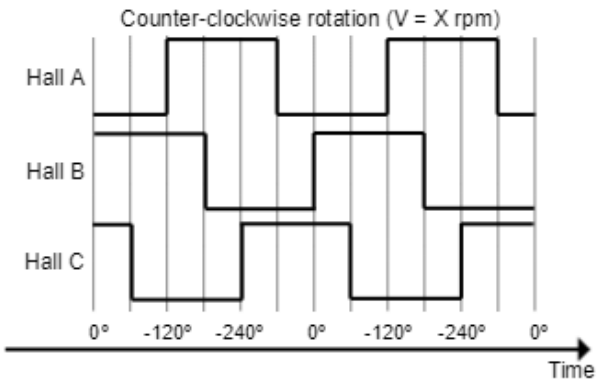

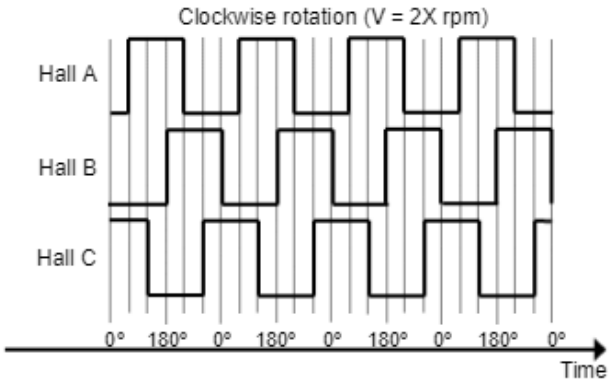

Next figure illustrates how to connect the digital Halls to Everest XCR and a simplified input schematic.

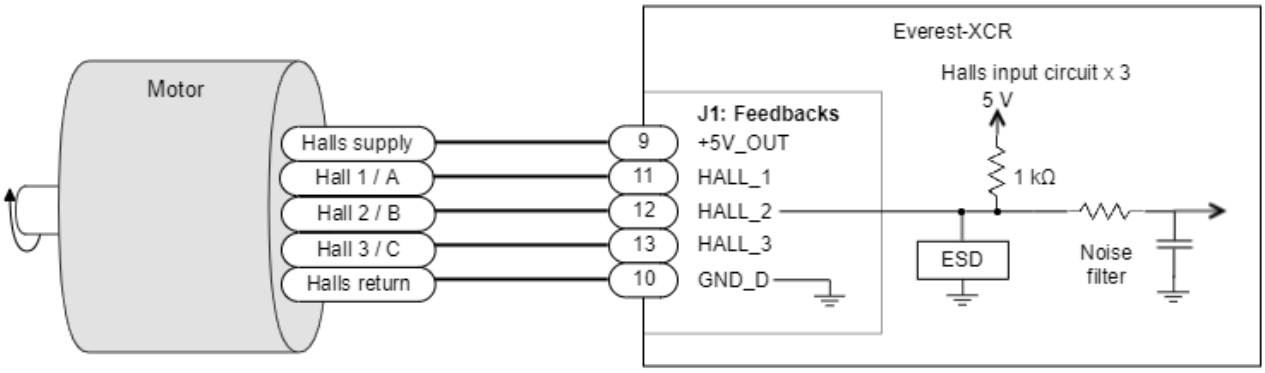

Velocity control with Halls

Due to the inherent low resolution of motor mounted Hall sensors, they are not recommended for velocity feedback in low speed applications.

9.6.2. Absolute Encoder 1

The Everest XCR servo drive absolute encoder 1 can be used as position, velocity, and commutation feedback device. This sensor generates digital data that represent the encoder actual position. From the position information, speed and direction of motion is calculated. The position is not lost even if the encoder is powered down, which means that it is not necessary to move to a reference position as with incremental type encoders. The following table shows the absolute encoder inputs electrical specifications.

Specification	Value
Type of inputs	Differential / Single ended ESD protected
ESD capability	IEC 61000-4-2 (ESD) ± 30 kV (air), ± 30 kV (contact) IEC 61000-4-5; tp = 8/20 µs 12 A, 200 W
Maximum operating voltage range	-0.5 ~ 5.5 V
Operating frequency	100 kHz to 10 MHz (user configurable)
Receiver hysteresis	min 50 mV typ 80 mV (DATA+ - DATA-)
Termination	220 Ω differential on data line
Fail safe bias resistors	ENC_x+ (positive input) 500 Ω to 5 V ENC_x- (negative input) 500 Ω to 2.5 V (equivalent)

Next Figure shows how to connect a single SSI or BISS-C absolute encoder to the Everest XCR servo drive.

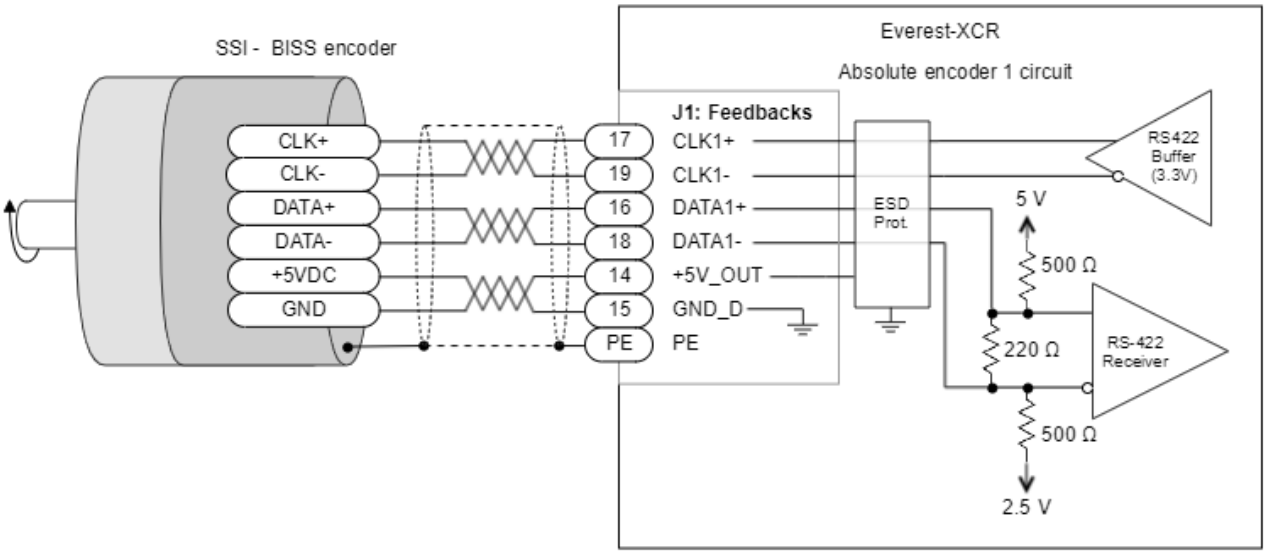

For single-ended devices, connect the positive pins of CLK+ and DATA+ and leave the other pins unconnected.

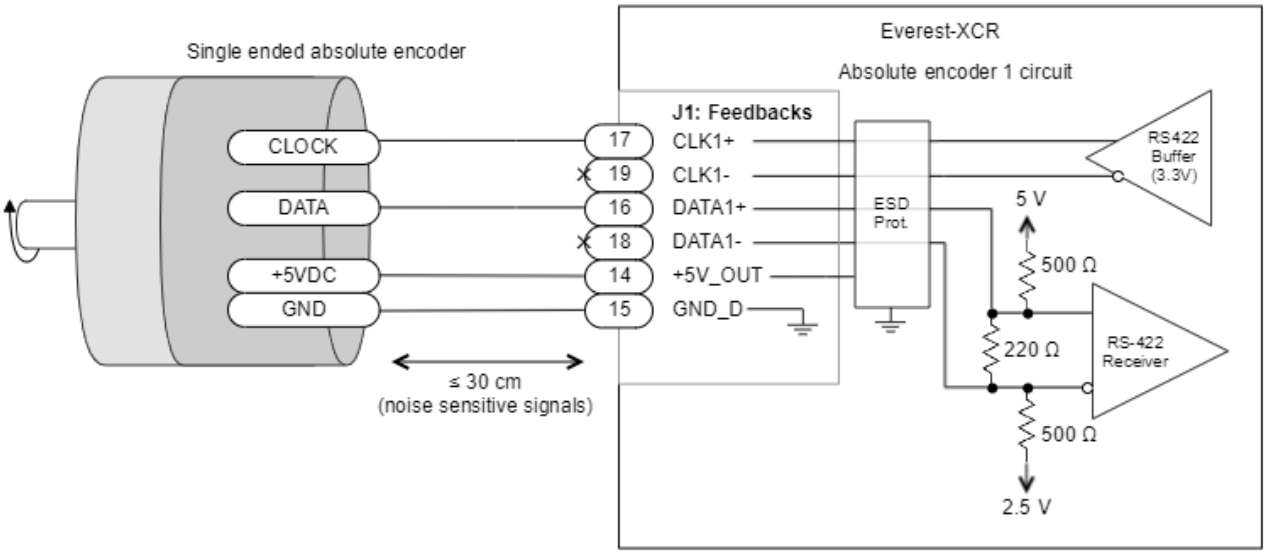

In the case that the encoder has a current consumption higher than 200 mA (maximum current output of the +5V_OUT pin of the Everest XCR) or that the encoder has an input supply > 5V, an external power supply will need to be used in order to power the encoder and in this case some wiring changes need to be taken into account (this applies to both the differential and single-ended encoders, both incremental and absolute):

- Data and clock connections remain the same between the encoder and the drive
- +5V_OUT pin of the drive is not connected
- The input voltage pin of the encoder is connected to the input voltage of the additional power supply
- The GND of the additional power supply is connected to both GND pins of the encoder and the drive in order to have a proper reference for the encoder signals

For dual daisy-chain BISS-C use the following connection. Dual BISS-C can be used for redundancy or to read the position of the rotor before and after a gearbox. Further details on this interface can be found here BiSS-C slave 2 (daisy chain).

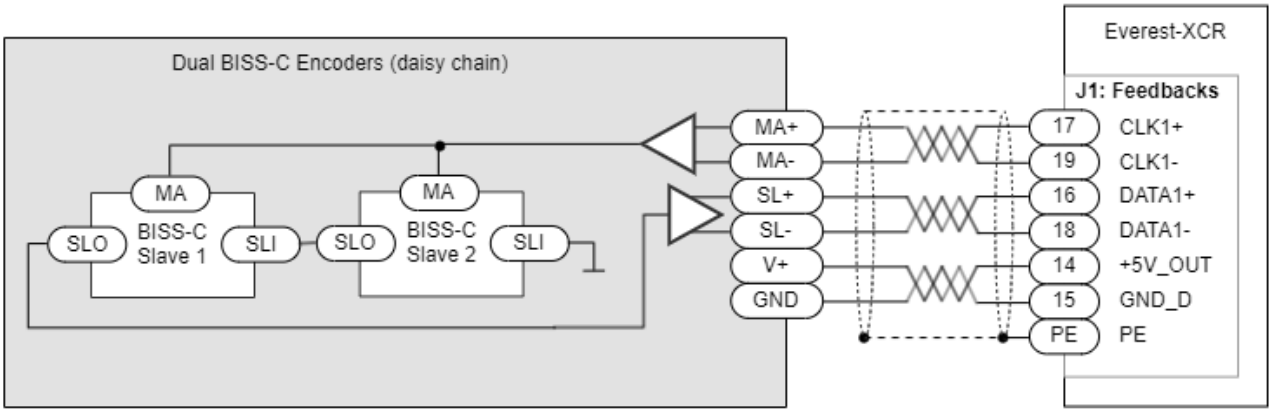

9.6.3. Absolute Encoder 2

The Absolute Encoder 2 interface can be used as a position, velocity and commutation feedback device. This feedback is shared with the incremental encoder input, so you will have to select which one is used by software.

Specification	**Value**
Type of inputs	Differential / Single ended ESD protected
ESD capability	IEC 61000-4-2 (ESD) ± 30 kV (air), ± 30 kV (contact) IEC 61000-4-5; tp = 8/20 µs 12 A, 200 W
Maximum operating voltage range	-0.5 ~ 5.5 V
Operating frequency	100 kHz to 10 MHz (user configurable)
Receiver hysteresis	min 50 mV typ 80 mV (DATA+ - DATA-)
Termination	220 Ω differential on data line. Fail safe basing resistors of 1 kΩ, see drawings.
Fail safe bias resistors	ENC_x+ (positive input) 1 kΩ to 5 V ENC_x- (negative input) 1 kΩ to 2.5 V (equivalent)

The next figure shows how to connect a secondary SSI absolute encoder to the Everest XCR servo drive.

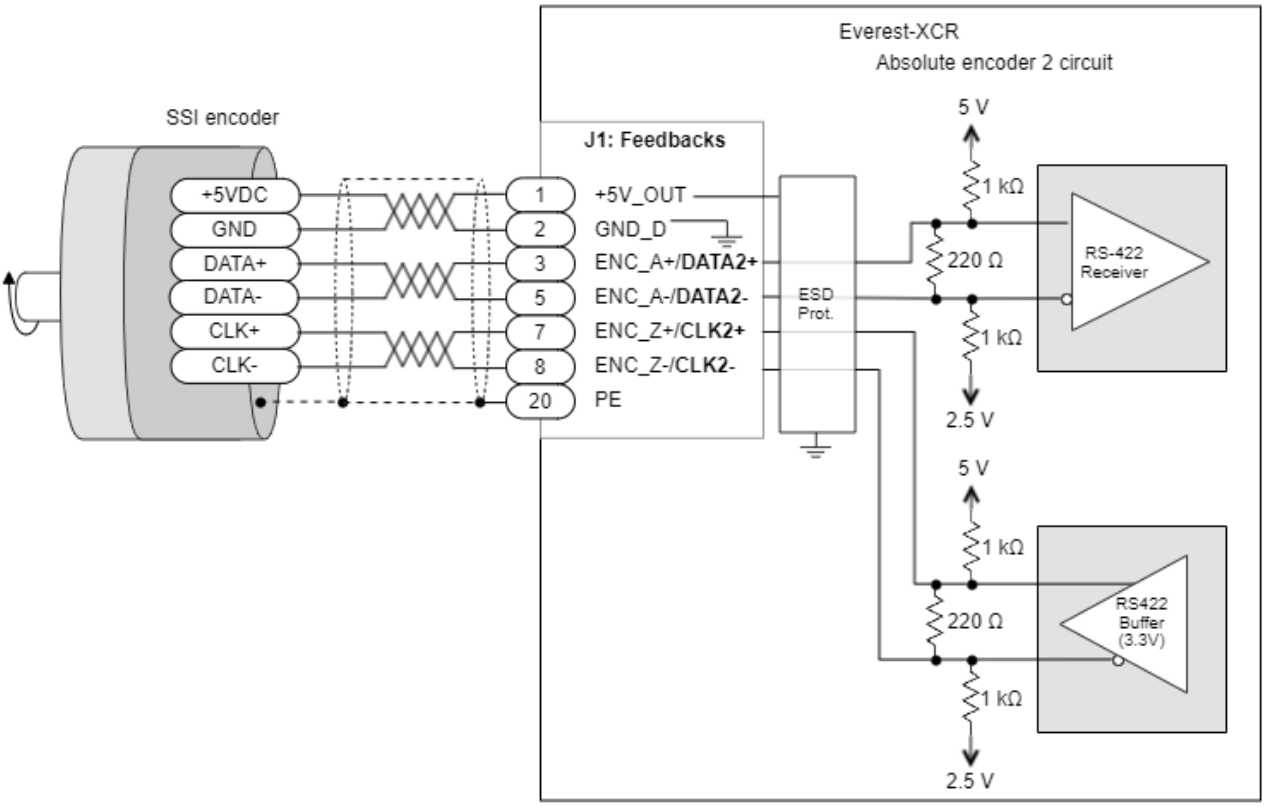

9.6.4. Incremental Encoder

Everest XCR can use single-ended or differential digital incremental encoder inputs (also known as quadrature incremental encoders) for velocity and/or position control, as well as for commutation purposes. The encoder provides incremental position feedback that can be extrapolated into precise velocity or position information. Using high-resolution encoders allows Everest XCR to perform sinusoidal commutation. Channel A and channel B signals should have a phase shift of 90 degrees, indicating the rotation direction. The drive has an optional index signal input. Index signal (Z) is a single pulse per revolution signal that can be used to know absolute positions and for homing operations. The following table illustrates the digital encoder inputs main features.

Specification	**Value**
Type of inputs	Non-isolated Differential or single ended ESD protected
Number of inputs	3 (A, B and Index)
ESD capability	IEC 61000-4-2 (ESD) ± 30 kV (air), ± 30 kV (contact) IEC 61000-4-5; tp = 8/20 µs 12 A, 200 W
Maximum voltage range	-0.5 ~ 5.5 V
Maximum recommended working frequency	10 MHz (differential)

Specification	Value
Maximum readable pulse frequency	50 MHz
Termination resistor	220 Ω (between ENC_x+ and ENC_x-).
Fail safe bias resistors	ENC_x+ (positive input) 1 kΩ to 5 V ENC_x- (negative input) 1 kΩ to 2.5 V (equivalent)

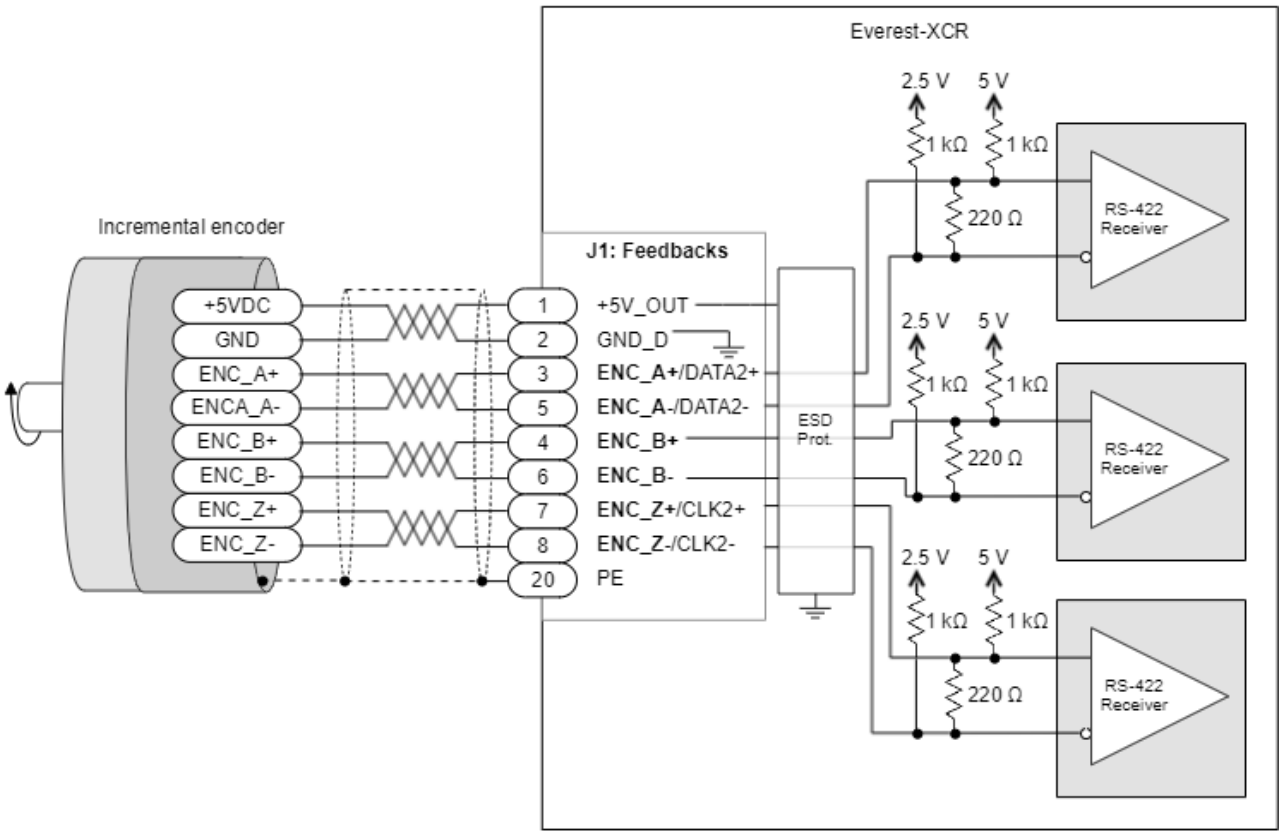

The wiring of a single-ended encoder to the Everest XCR is shown next:

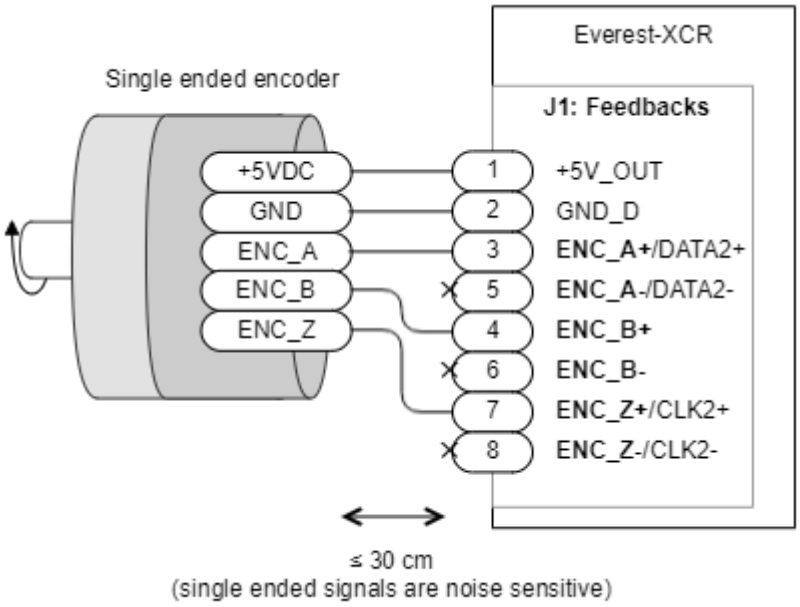

Sometimes encoders require different supply voltages than 5 V or need more than the 200 mA provided by the drive. In those cases, the connection from the external power source should be as shown next:

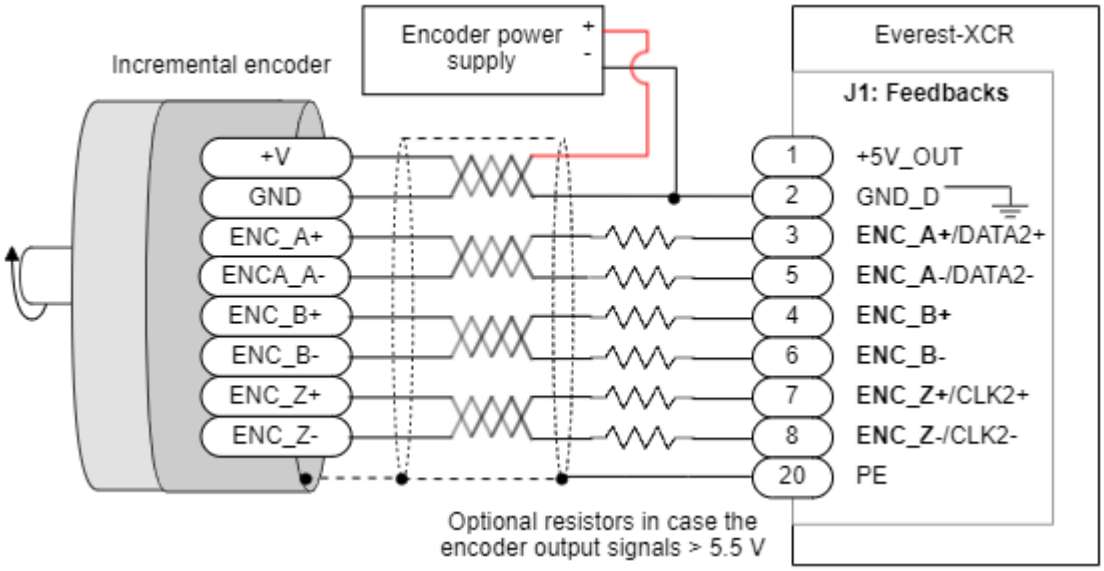

9.6.5. Feedback wiring recommendations

Signal distortion and electrical noise is a common problem in feedback signals. These problems can result in a bad position or velocity calculation for both digital feedbacks (gain or loss of counts) and analog feedbacks (wrong voltage levels).To minimize these problems some wiring recommendations are shown:

- **Use differential signals** whenever is possible. That is, connect both positive and negative signals of differential feedback sensors. **Use a twisted pair for each differential group of signals** and another twisted pair for the +5 V supply and GND. Twisted-pairs help in the elimination of noise because disturbances induced in twisted pairs
- Twisted-pairs help in elimination of noise due to electromagnetic fields by twisting the two signal leads at regular intervals. Any induced disturbance in the wire will have the same magnitude and result in error cancellation.

- **Connect the Everest XCR and encoder GND signals** even if the encoder supply is not provided by the drive.
- **The connection between Everest XCR PE and the motor metallic housing is essential** to provide a low impedance path and minimize noise coupling to the feedback. For further information, see Protective Earth wiring.
- **For better noise immunity, use shielded cables,** with the shield connected to PE only in the drive side. Never use the shield as a conductor carrying a signal, for example as a ground line.
- It is essential to **keep feedback wiring as far as possible from motor power,** AC power and all other power wirings.

9.7. Inputs and Outputs

The Everest XCR Servo Drive provides several inputs and output terminals for parameter observation and drive control options.

- 4x 5 V non-isolated single ended digital inputs (IN1, IN2, IN3, IN4).
- 1x ±10V differential 16 bit analog input (AN1+, AN1-)
- 4x 5 V non-isolated digital outputs (OUT1, OUT2, OUT3, OUT4).

Non-isolated I/O

Everest XCR inputs and outputs are not isolated. The reference voltage of the drive (GND_D) and the ground of the devices connected to I/Os must be the same. Otherwise, inputs or outputs may be damaged.

For electromagnetically noisy environments and for signals that could be user-accessible and cause electric shock, reinforced isolation is necessary. It is recommended to use isolators like Silicon Labs Si87xx series, Texas Instruments ISO121x isolators.

Les entrées et sorties de l'Everest XCR ne sont pas isolées. La tension de référence du lecteur (GND_D) et la masse des dispositifs connectés aux E/S doivent être identiques. Dans le cas contraire, les entrées ou les sorties peuvent être endommagées.

Pour les environnements à fort bruit électromagnétique et pour les signaux qui pourraient être accessibles à l'utilisateur et provoquer des chocs électriques, une isolation renforcée est nécessaire. Il est recommandé d'utiliser des isolateurs comme ceux de la série Si87xx de Silicon Labs, les isolateurs ISO121x de Texas Instruments.

9.7.1. Digital Inputs Interface

The non-isolated digital inputs are ready for 5 V or 3.3 V digital levels. The following table shows their electrical specifications.

Specification	Value
Number of inputs	4 (IN1, IN2, IN3, IN4)
Type of input	Single ended ESD protected Low-pass filtered
ESD capability	IEC 61000-4-2 (ESD) ± 15 kV (air), ± 8 kV (contact)
Input current	0.2 mA at 5 V (25 kΩ equivalent input resistance)
Maximum input voltage range	-2 V ~ +7 V
High level input voltage	> 3 V
Low level input voltage	< 2 V
Minimum hysteresis	200 mV

Specification	Value
1st order filter cutting frequency (-3 dB)	265 kHz

Next figure shows an example of how to wire digital inputs with various input options. For higher voltage systems like 12 V or 24 V a series resistance should be connected to the input.

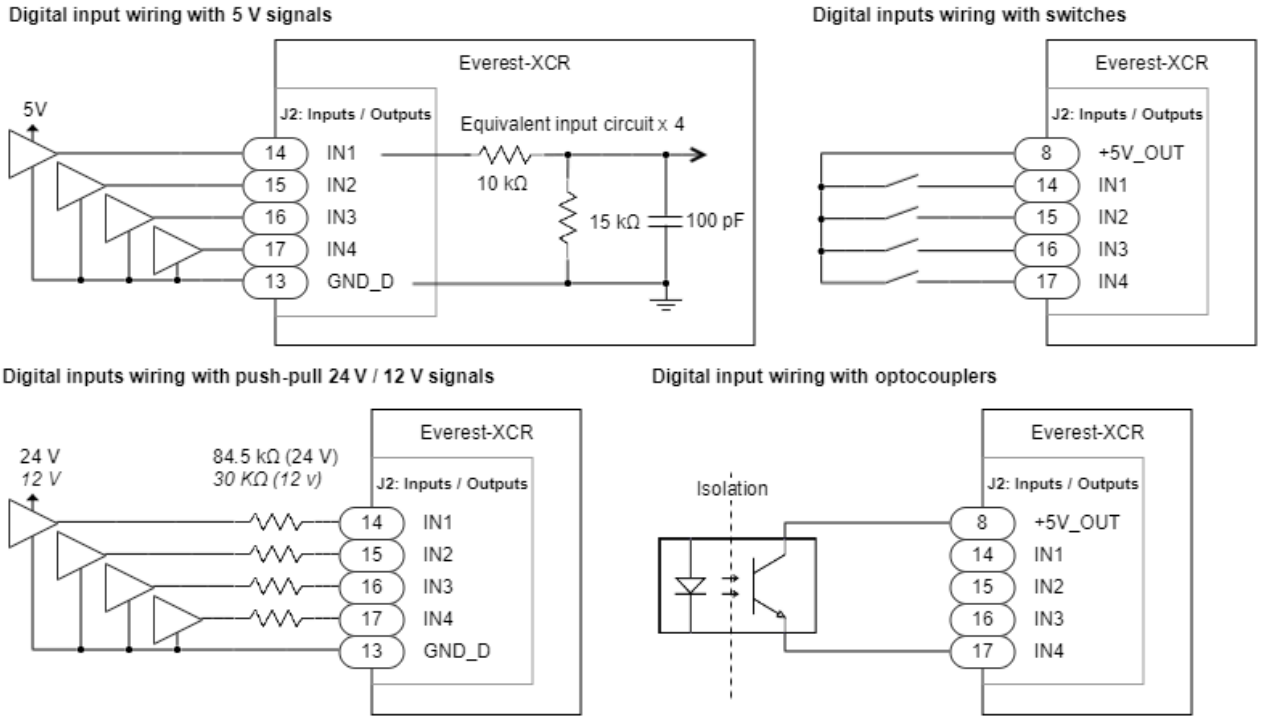

The interface for 3 wire NPN and PNP sensors is shown next.

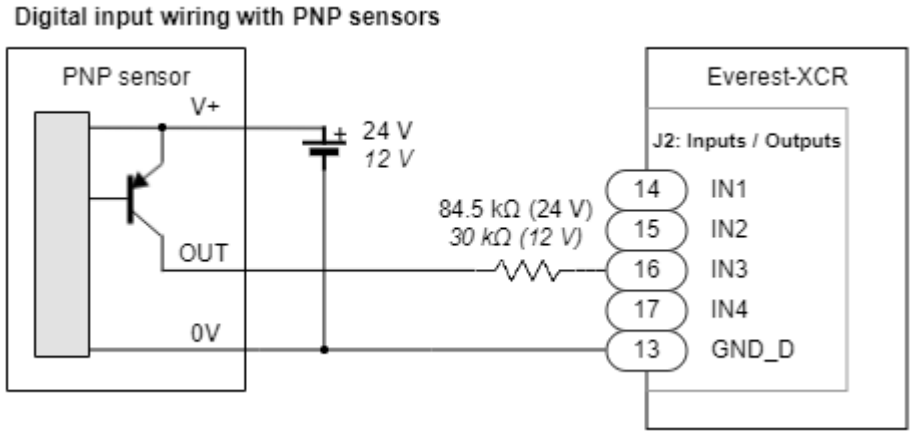

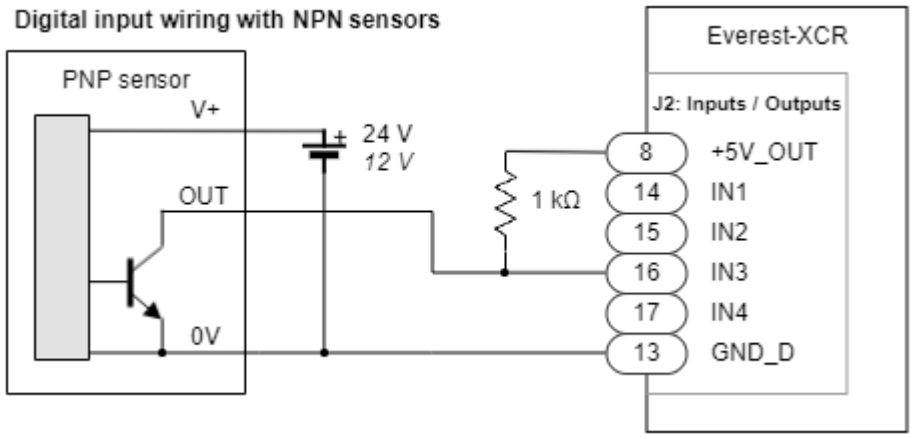

9.7.2. Analog Input Interface

The Everest XCR has a high accuracy fully differential 16-bit analog input AN1. See the specifications next:

Specification	**Value**
Type of input	Differential ESD protected
ESD capability	IEC 61000-4-2 (ESD) ± 15 kV (air), ± 8 kV (contact)
Input voltage range	±10 V differential (AN1+ - AN1-)
Analog input resolution	16 bits, 0.305 mV / ADC coun (Theoretical values: +10 V → 65535 counts, -10 V → 0 counts)
Accuracy	±0.05% from -9.8 V to + 9.8 V. 0.5% full range
Maximum absolute voltage on any pin (AN1+ or AN1-)	±15 V

Specification	Value
1st order filter cutting frequency (-3 dB)	10 kHz
Input impedance	5 kΩ typ

Next figure shows how to connect the analog input. Note that for single-ended inputs it is recommended to connect the negative AN1- to GND_D.

Also, for long distances, twisted pair, shielded cables are preferred. Connecting the shield to GND will improve the signal to noise ratio. However, take precautions not to connect the shield to PE as this could actually increase the noise of the signals.

Analog input wiring with ± 10 V differential sensor

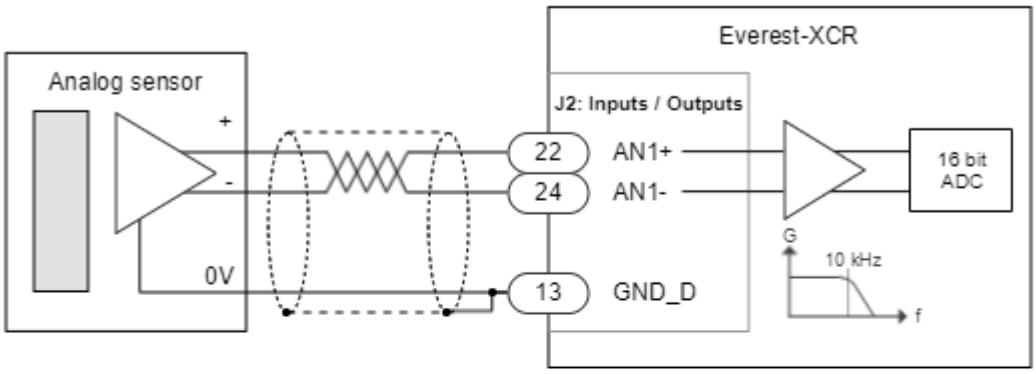

Analog input wiring with ± 10 V single ended sensor

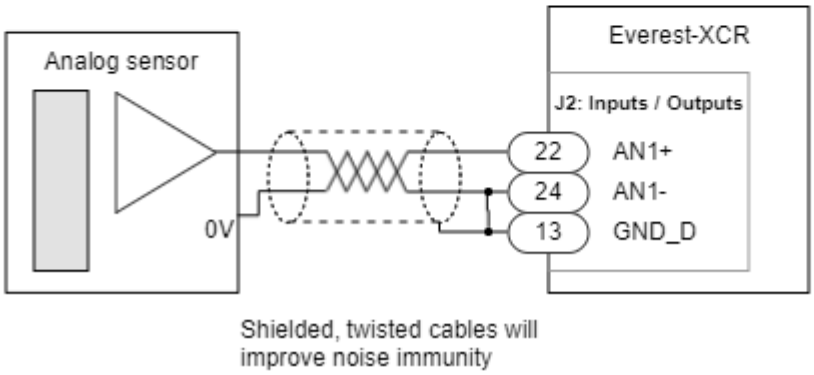

9.7.3. Digital Outputs Interface

Everest XCR Servo Drive has 4 non-isolated digital outputs. These outputs can be used to drive optocouplers, LEDs or other digital circuits.

Specification	Value
Number of outputs	4
Type of output	Push-pull output at 5 V ESD protected. Overload, short circuit protected
ESD capability	IEC 61000-4-2 (ESD) ± 15 kV (air), ± 8 kV (contact)
Maximum sink/source current	±10 mA
Unloaded output high voltage	4.5 ~ 5 V
Unloaded output low voltage	0 ~ 0.5 V

The wiring of the digital outputs is shown next:

Digital outputs wiring to a I/O module

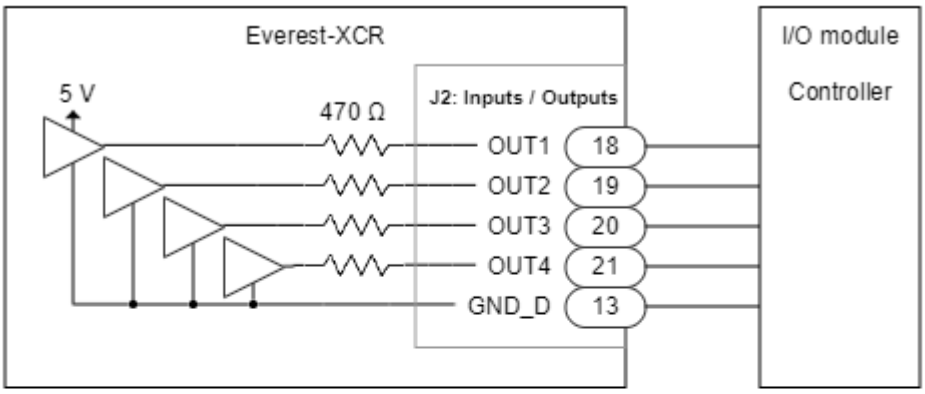

Digital outputs interface to optocouplers

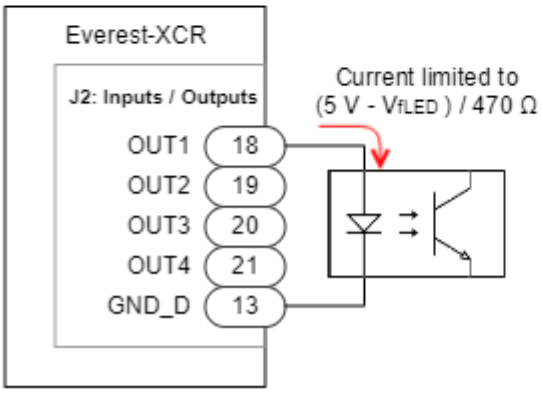

Digital outputs to drive LEDs

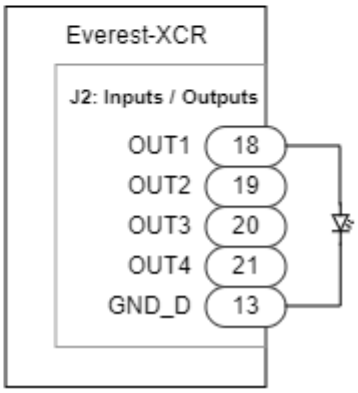

9.8. Communications

The Everest XCR provides the following network communication interfaces for configuration and operation.

Part number	Communication Option	J4 connector (ECAT 0) functionality	J3 connector (ECAT 1) functionality	J2 (I/O) connector pins 9, 11
EVE-XCR-C	CANopen / Ethernet	**EtherNET** standard port (default address 192.168.2.22). Allows configuration and tuning using Motion Lab 3.	**EtherNET** standard port (default address 192.168.2.22). Allows configuration and tuning using Motion Lab 3.	**CANopen** interface CAN_H and CAN_L.
EVE-XCR-E	EtherCAT	**EtherCAT INPUT** port 0. Motion Lab 3 can be accessed via Beckhoff Twincat tool from a PC.	**EtherCAT OUTPUT** port 1	Not used.

9.8.1. EVE-XCR-C (CANopen & Ethernet Interface)

Everest XCR Servo Drive supports the CANopen interface, a multi-terminal communication protocol based on CAN (Controller Area Network) bus. J4 connector ETH Port 0 and J3 connector ETH Port 1 could be used with a standard Ethernet port for configuration. The Everest XCR CAN interface is not isolated. If your computer has no Ethernet port, you can use an Ethernet - USB adapter, like TeckNet HU043.

It is possible to control a servo drive from a CAN Master or from a computer with a CAN transceiver. Some USB to CAN transceivers that work with Everest XCR are indicated here: Kvaser Leaf SemiPro HS (EAN: 73-30130-00242-5), Kvaser Leaf Professional Rugged HS (EAN: 73-30130-00509-9), Peak Systems PCAN-USB (IPEH-002021), Peak Systems PCAN-USB opto-decoupled (IPEH-002022). Always ensure to have the drivers installed prior to connection.

An example of the required wiring for the CANopen interface is shown in the next figure.

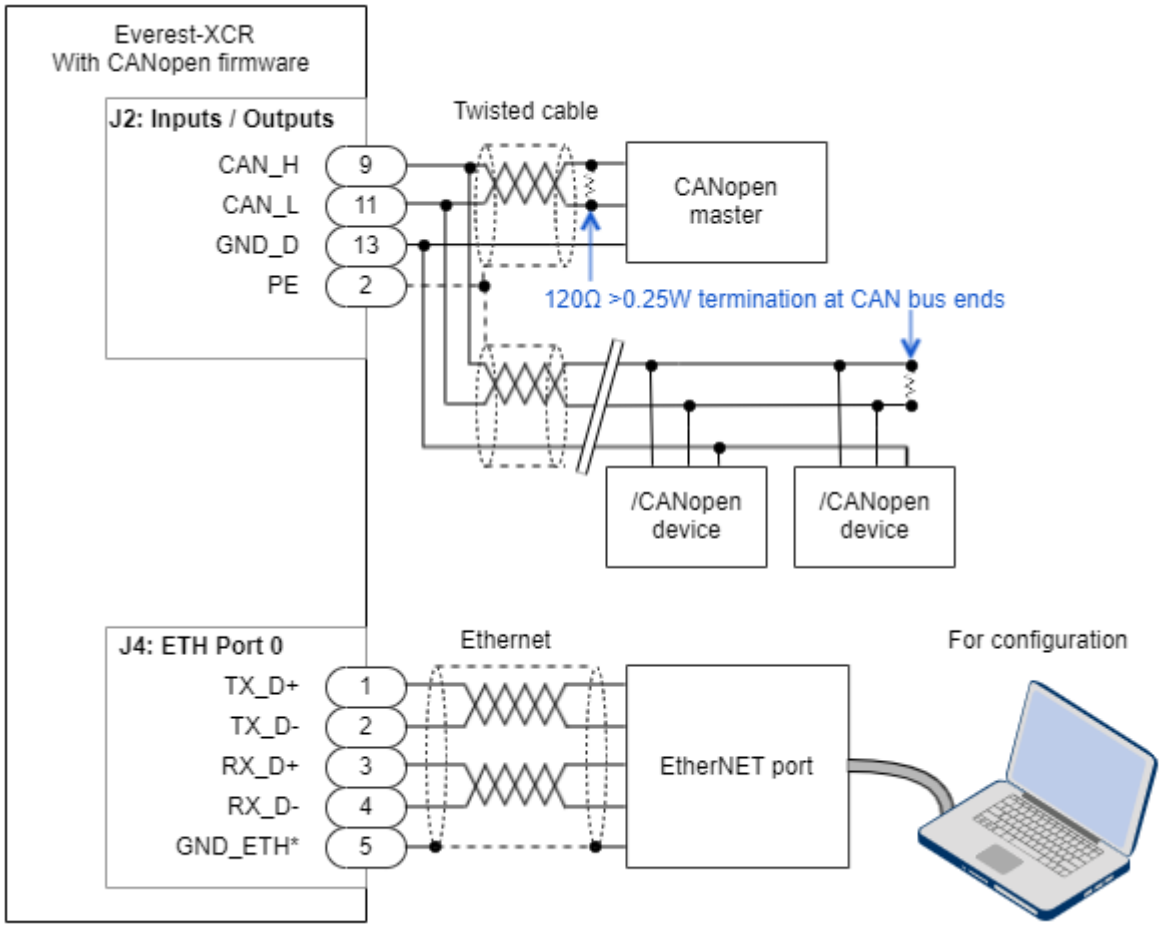

9.8.1.1 CAN wiring recommendations

- Build CAN network using cables with **2-pairs of twisted wires** (2 wires/pair) as follows: one pair for CAN_H with CAN_L **and** the other pair for **GND**.
- Do not make a 2 wire only interface. Not connecting the CAN GND may result in loss of data and poor EMC performance.
- Cable impedance should have an impedance of 100 to 140 Ω (120 Ω typical) and a capacitance below 30 pF/meter.
- Whenever possible, use bus links between the CAN nodes. **Avoid using stubs** (a "T" connection, where a derivation is taken from the main bus). If stubs cannot be avoided, keep them as short as possible. For maximum speed (1 Mbps), use a stub length lower than 0.3 meters.
- For a total CAN bus length **over 40 meters**, it is mandatory to **use shielded twisted cables**. Connect the cable shield to protective earth at both ends. Ensure that the cable shield is connected to the connector shield, as the connection to host protective earth is usually soldered inside the connector.

Drive ID

When installing CANopen communication, ensure that each servo drive is allocated a unique ID. Otherwise, CANopen network may hang.

Lors de l'installation de la communication CANopen, assurez-vous que chaque servomoteur se voit attribuer un identifiant unique. Sinon, le réseau CANopen risque de se bloquer.

9.8.2. EVE-XCR-E (EtherCAT Interface)

Everest XCR Servo Drive provides access to the EtherCAT field bus system. EtherCAT is an isolated bus suitable for hard and soft real-time requirements in automation technology, test and measurement, and many other applications. The drive can be accessed and configured using any EtherCAT master over EtherCAT connecting the PC to the port 0 (in).

The next figure shows how to connect the Everest XCR in an EtherCAT bus. It is recommended to follow the standard IEC 61918-2013 for best practices.

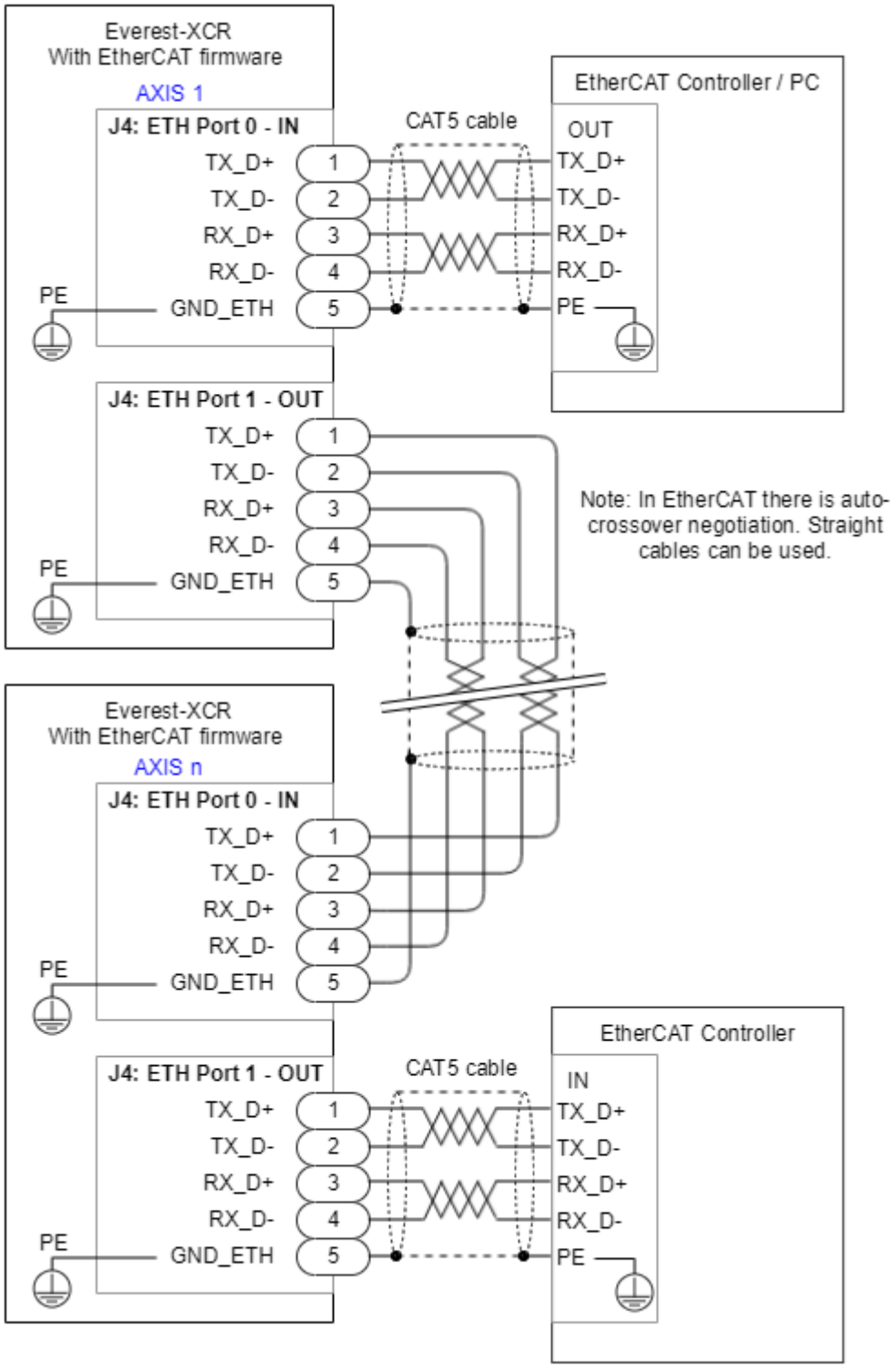

9.8.2.1 Recommended EtherCAT cables and connectors

The following table shows the recommended connectors and cable colors for EtherCAT according to IEC 61918 Appendix H.

Signal	Function	Corresponding pin on Everest XCR	Pin for RJ45	M12-4 D coded	M8-4 D coded	Cable colour as per TIA-568B	Cable colour as per EN61918
TX_D+	Transmit data +	1	1	1	1	White / Orange	Yellow
TX_D-	Transmit data -	2	2	3	4	Orange	Orange
RX_D+	Receive data +	3	3	2	2	White / Green	White
RX_D-	Receive data -	4	6	4	3	Green	Blue
-	Not used, leave these wires unconnected.	-	4	-	-	Blue	
-		-	5	-	-	White / Blue	
-		-	7	-	-	White / Brown	
-		-	6	-	-	Brown	
Screen	Screening	5	Housing	Housing	Housing	Metal	Metal
Image of the connector			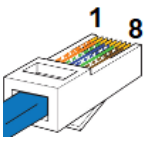	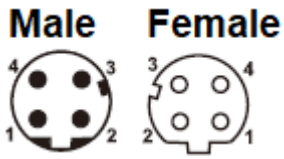			

9.8.2.2 Ethernet over EtherCAT (EoE) Protocol - Used by Motion Lab 3

Everest XCR Servo Drive supports Ethernet over EtherCAT protocol. This protocol encapsulates Ethernet frames into EtherCAT packets allowing to establish a communication between standard Ethernet clients and EtherCAT devices over an EtherCAT network in a transparent way.

Thanks to this protocol is possible to configure a specific Everest XCR of the network using Motion Lab without requiring to modify the wiring of the installation.

The next figure shows how to connect the Everest XCR in an EtherCAT bus and how to establish communication with Motion Lab 3 to configure the drive. EtherCAT controller/master needs to provide EoE capability and include two different Network Interfaces Cards (NIC). If your computer has no Ethernet port, you can use an Ethernet - USB adapter, like TeckNet HU043.

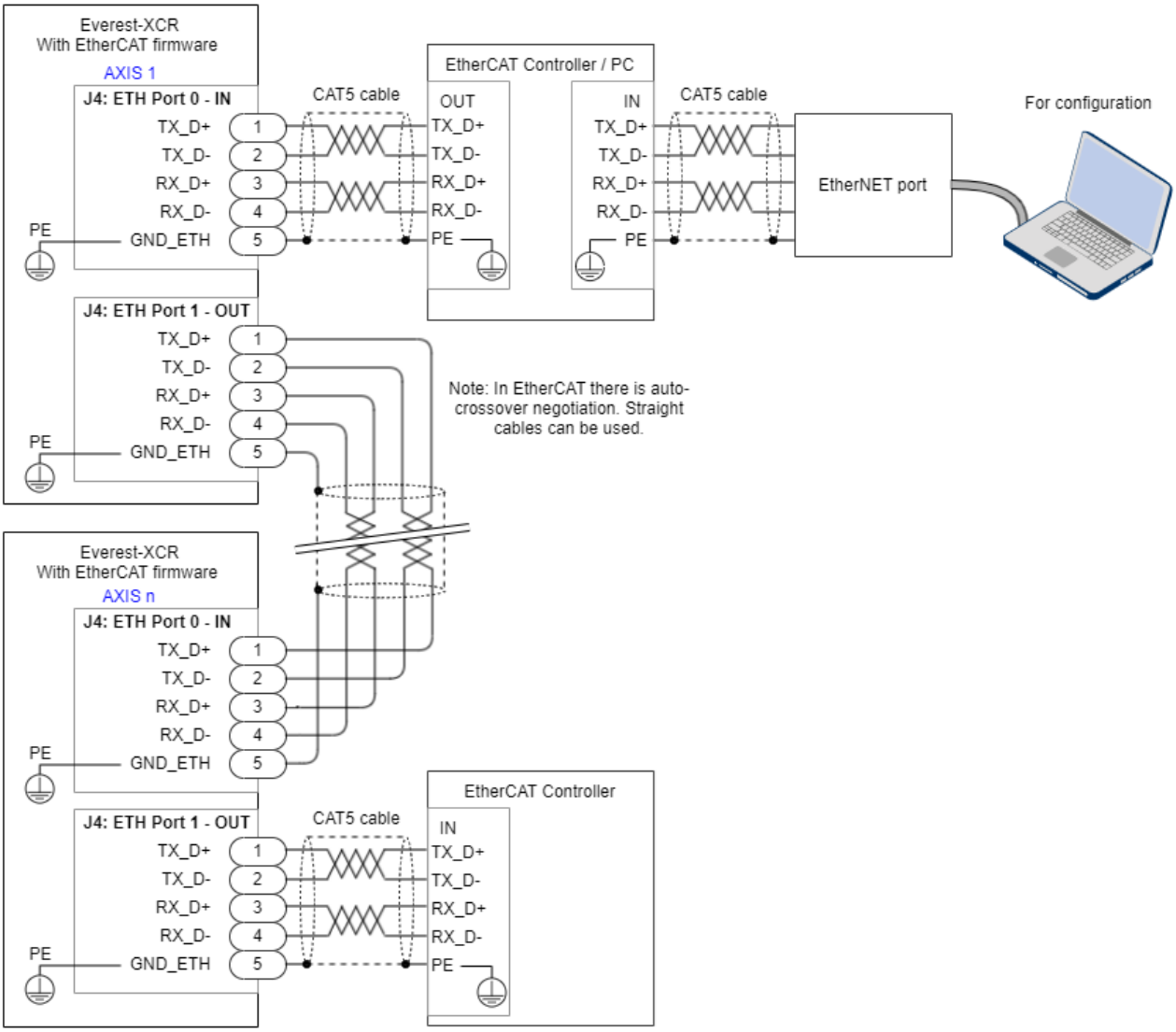

It is also possible to install Motion Lab 3 and EtherCAT Controller (i.e. Beckhoff TwinCAT) in the same PC reducing the number of needed NIC.

EoE and TwinCAT

You can find more information on how to configure EoE on Beckhoff TwinCAT in the following link: http://doc.ingeniamc.com/summit/manuals/reference-manual/tricks-and-tips/setting-up-ethernet-over-ethercat-eoe

10. Dimensions

All dimensions are in **mm**. All tolerances **≤ ±0.2 mm**. Assembly instructions are indicated here: Installation.

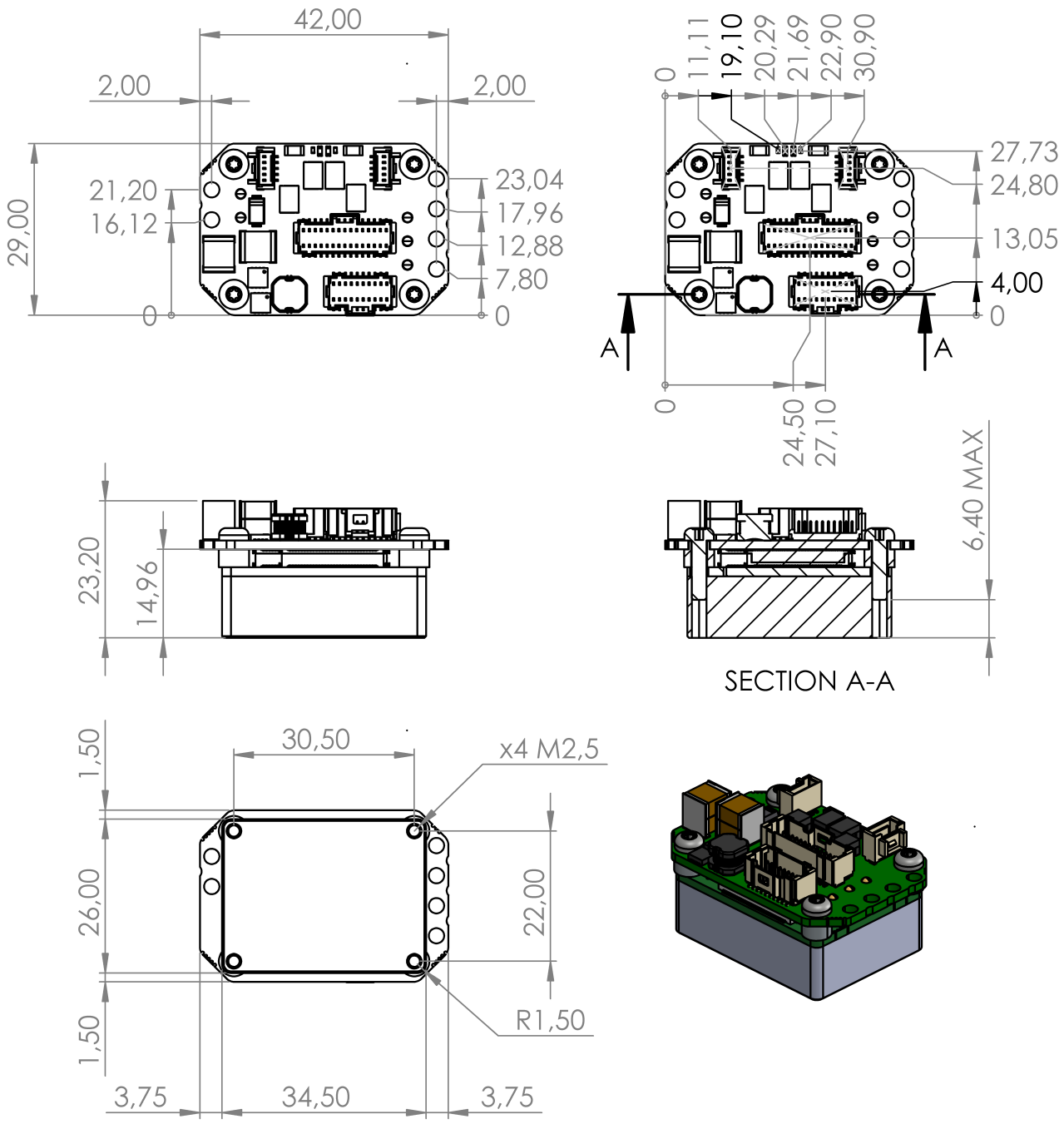

3D Model

For further detail, download the STEP model.

11. Installation

11.1. Unboxing

When unboxing the drive please ensure the following:

- Remove it from the bag carefully.
- Check that there is no visible physical damage. If any, report it immediately to the carrier.
- Check the part number of the drive on the side label.

11.2. Installation Safety Requirements

The drive has live circuits that can be touched and entail **a risk of electric shock** (*Protective Class 0*), as well as **a risk of thermal injury**. It must be mounted on a closed electrical operating area to which access is restricted to skilled or instructed personnel. This enclosure, cabinet, protection, or case should have a minimum Index of Protection of IP3X. To ensure electrical safety it is also important that the environment is clean from conductive pollution or condensation when the drive is powered (Pollution degree 2).

	WARNING HOT SURFACES! The drive and motor can become hot and cause severe burns. If any of the user-accessible surfaces exceeds 70°C, a hot-surface signal must be added. This is the responsibility of the installer.
	ATTENTION, le moteur peut être chaud. *Le moteur peut devenir très chaud > 70°C pendant le fonctionnement. Ne le touchez pas directement pour éviter les brûlures ! L'utilisation de la sonde de température est fortement recommandée.*
	DANGER, ELECTRIC SHOCK! Power and motor pins have live voltages which can exceed 50 V which can cause electric shock! Perform installation procedures without voltage. Ensure the drive is mounted on a closed electrical operating area which protects against direct contact.
	ATTENTION, surcharge du moteur. *L'Everest XCR peut laisser passer des courants qui peuvent endommager ou provoquer un incendie du moteur. Veillez toujours à ce que les courants nominaux continus et de pointe du moteur soient respectés en effectuant des réglages lors de la configuration du variateur.*

The drive may be operated without enclosure and protection against electric shock when it is supplied at Extra Low Voltage (ELV), ≤ 50 V.

11.3. Mounting the Drive to a Heatsink or Cooling Plate

The drive has 4x M2.5 threaded holes with a max. thread depth of **6.4 mm** for assembling the Everest XCR to a cooling plate or heatsink. See Dimensions section for further details. Assembling the drive correctly is essential to:

1. Provide a conduction heat dissipation path. Please see the Thermal and Power Specifications section in the Product Description chapter to determine your heat dissipation needs.
2. Ensure electrical conduction between the drive and Protective Earth, chassis, or the motor enclosure. This is strongly recommended for EMC and electrical safety.
3. Secure the drive in place to prevent any damage.

11.3.1. Back Installation

The preferred way to assemble the drive is from the back using a thermal interface tape and 4 x M2.5 screws. Thermal tapes and materials offer a clean and repetitive way to improve the heat transfer from the drive to the heat sink. There are several thermal interface alternatives, some suggested part numbers are T-Global Technology LI98-1140-27-0.25, Berquist Bond-Ply 100 series, t-Global Technology GT30S, or copper conductive tape CCH-18-101-0100. To install the drive, follow these steps:

1. Ensure the bottom surface of the drive and the heatsink are clean and dry. Isopropyl alcohol (isopropanol) applied with a lint-free wipe or swab should be adequate for removing surface contamination such as dust or fingerprints. Do not use “denatured alcohol” or glass cleaners which often contain oily components. Allow the surface to dry for some minutes before applying the tape. More aggressive solvents (such as acetone, methyl ethyl ketone (MEK) or toluene) may be required to remove heavier contamination (grease, machine oils, solder flux, etc.) but should be followed by a final isopropanol wipe as described above. Note:- Be sure to read and follow the manufacturers’ precautions and directions when using primers and solvents.
2. Cut a 34 mm x 27 mm piece of the thermal tape.
3. Apply the tape to the bottom of the drive at a modest angle with the use of a squeegee, rubber roller, or finger pressure to help reduce the potential for air entrapment under the tape during its application. The liner can be removed after positioning the tape onto the first substrate.
4. Assemble the drive to the heatsink ensuring alignment to the holes by applying compression to ensure good wetting of the substrate surfaces with the tape. Proper application of pressure ~ 5 kg and time (> 5 s) is crucial for the best thermal performance as the surface adhesive will have better wetting. A twisting motion during assembly will improve wetting. This should be a back and forth twisting motion during the application of compression. Moderate heat (<85ºC) can be employed to increase the wetting percentage and wetting rate of the substrates and to build room temperature bond strength.
5. Screw the 4 x M2.5 screws applying between 0.17 and 0.3 Nm of torque. Note that the M2.5 thread should be handled gently. The threads may penetrate the thermal interface material if the corners have not been trimmed.

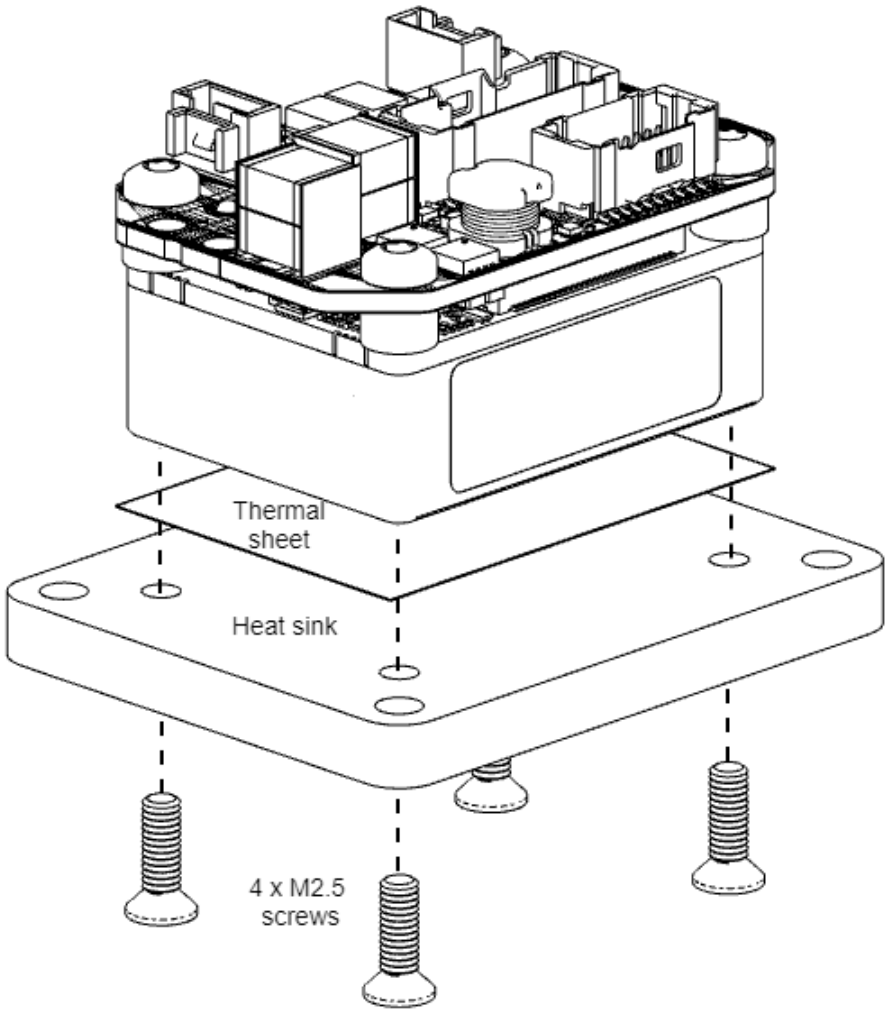

For best power and thermal performance (high current and voltage application), thermal grease, pastes, or silicone are recommended. The best thermal material tested is ARCTIC MX-4. Chemtronics CW7250 (white paste non-conductive) and Chemtronics CW7100 (silver-based, conductive) also offer good results.

Mounting the drive without a thermal interface material is also acceptable for low power applications since any imperfection on the heatsink or case surfaces will create air bubbles that would reduce the heat transfer.

11.3.2. Front Installation

Front installation can be done using a Flat heatsink together with the thermal tape and 4 x M2.5 x 8 DIN965 screws.

1. Assemble the drive to the flat heatsink following the Back Installation process.
2. Use appropriate thermal interface material between the previously cleaned Flat Heatsink and the other surface.
3. Screw using M3 screws with appropriate torque according to the base material.

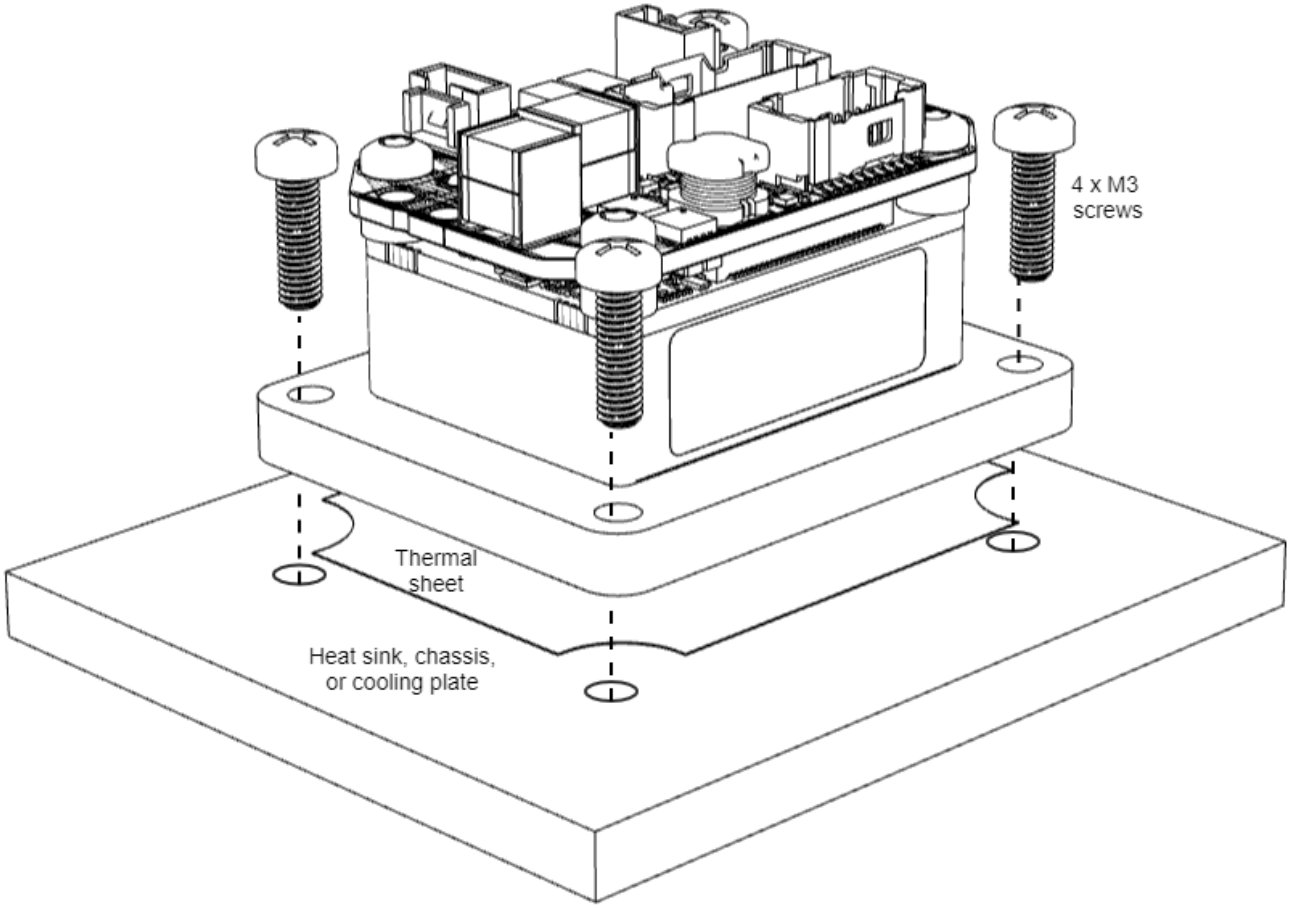
4 x M3
screws
Thermal
sheet
Heat sink, chassis,
or cooling plate

12. Commissioning

12.1. Safety first

Always keep the recommendations of Safety Information in mind. Spending some extra minutes on safety, keeping the workspace clean and ordered can save several days or weeks in case of malfunction or damage!

	DANGER
	ROTATING PARTS can cause serious injury. Keep hands clear. Before starting motors, ensure that all moving parts are reliably secured and assembled. High speed moving parts are very dangerous. **Never try to brake the motor with your hands.**

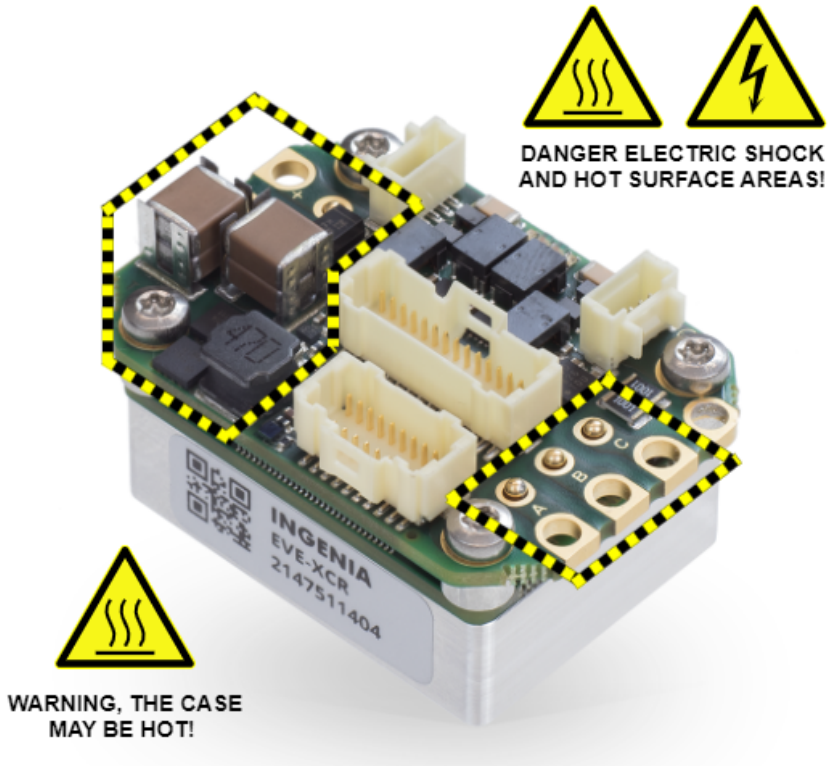

Initial Commissioning

Once the Everest has been installed as described in Installation, wired according to the Wiring and Connections and Pinout, the initial commissioning can be performed following the Quick Start guide:

- Wire the drive
- Switch on the power supply
- Connect PC and servo drive
- Configure parameters and tuning

12.2. Decommissioning

Before decommissioning, ensure the power supply is off (wait a minimum of 5 s for capacitors to discharge), and the drive is cool.

First, disconnect all the cables and connectors.

Then, removing the Everest from the plate or heatsink carefully following this sequence:

1. Remove the 4x M2.5 screws.
2. Separate the Everest from the heatsink by prying, torquing or peeling. Make sure the forces are applied to the Everest enclosure and not to the PCB or connectors.
3. The thermal tape will be destroyed upon separation. The surfaces should be re-cleaned according to the recommendations mentioned above. Do not try to reuse the thermal tape.
4. Heating the substrates can reduce the adhesion level and make removal easier

If you need disposing of the Everest, please:

- Be sure to comply with local disposal regulations.
- Separate the housing part made of aluminum.
- Dispose of the parts following the applicable legal regulations regarding electronic waste.
- Dispose of the packaging material following the applicable legal regulations.

13. EMC and Environmental Testing Details

Testing Type	Compliance Details
EMC Compliance	IEC 61800-3:2017: Adjustable speed electrical power drive systems. Part 3: EMC requirements and specific test methods • CISPR 16-1-2:2014 + CISPR 11:2015 + A1:2016: Conducted emissions: EN 61800-3 Category C2 • CISPR 22:2015: Conducted emissions for Ethernet fieldbus standard: EN 55022 Class B • CISPR 16-1-4:2010 + CISPR 11:2015 + A1:2016: Electromagnetic radiation emissions: EN 55032 Class B, EN 61800-3 Category C3 IEC 61000-6-2:2016: Electromagnetic compatibility (EMC) - Part 6-2: Generic standards - Immunity standard for industrial environments • IEC 61000-4-2:2008: ESD (electrostatic discharge) disturbances: Performance criterion B. • IEC 61000-4-3:2006: Radio-frequency electromagnetic field disturbances, amplitude modulated 80 MHz to 2,7 GHz: Performance criterion A. • IEC 61000-4-4:2012: Fast transients disturbances: Performance criterion B. • IEC 61000-4-6:2013: Conducted radio frequency disturbances common mode 150 kHz to 80 MHz: Performance criterion A. IEC 61800-5-2:2016: Adjustable speed electrical power drive systems. Part 5-2: Safety requirements – Functional, Clause 9.3 (Immunity Testing) • IEC 61000-4-2:2008: ESD (electrostatic discharge) disturbances: Performance criterion Functional Safe. • IEC 61000-4-3:2006 + AMD1:2007 + AMD2:2010: Radio-frequency electromagnetic field disturbances, amplitude modulated 80 MHz to 2,7 GHz: Performance criterion Functional Safe. • IEC 61000-4-4:2012: Fast transients disturbances: Performance criterion Functional Safe. • IEC 61000-4-6:2013: Conducted radio frequency disturbances common mode 150 kHz to 80 MHz: Performance criterion Functional Safe.

Testing Type	Compliance Details
Environmental Testing Compliance	IEC 60068-2-1:2007: Test Ad, Cold IEC 60068-2-2:2007: Test Be, Dry Heat IEC 60068-2-38:2009: Test Z/AD, Composite temperature / humidity cyclic IEC 60068-2-78:2012: Test Cab, Damp heat, steady state IEC 60068-2-6:2007: Test Fc: Vibration (sinusoidal) IEC 60068-2-27:2008: Test Ea: Shock

14. Service

We are committed to quality customer service. In order to serve in the most effective way, please open a ticket on our service desk at www.ingeniamc.com/support or contact your local sales representative for assistance.

INGENIA-CAT S.L.
AVILA 124, 2-B
08018 BARCELONA

INGENIA
passion for motion